digital electronic gmbh

LIEFERÜBERSICHT

QUARZE • OSZILLATOREN
RESONATOREN • FILTER

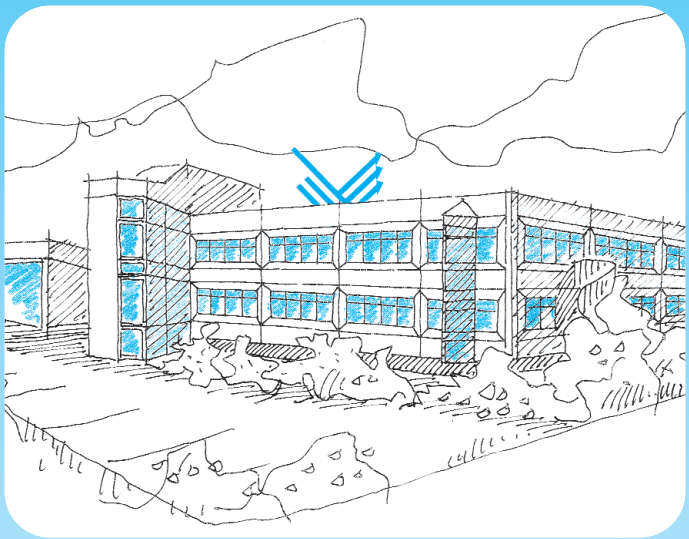

www.digitallehrer.de

CRYSTALS

OSCILLATORS

DSL

INHALTSVERZEICHNIS / CONTENT

digital electronic gmbh • Tel.: +49 (0) 8221/708-0 • Fax: +49 (0) 8221/708-80

SMD

SM-49	12.9 x 4.7 x 4.0		24
SM-49-4	13.0 x 4.7 x 5.0		25
MM-39SL	12.5 x 4.6 x 3.7		26
CPX-84	8.0 x 4.5 x 1.6		27
CPX-49S	7.0 x 5.0 x 1.1		28
CPX-49SM	6.0 x 3.5 x 1.1		29
CPX-49SP	5.0 x 3.2 x 0.8		30
CPX-53GA • CPX-53GD **CPX-53GB • CPX-53GC**	5.0 x 3.2 x 0.8 5.0 x 3.2 x 1.2		31
CPX-42	4.0 x 2.5 x 0.8		32
CPX-32 **CPX-32F**	3.2 x 2.5 x 0.6 3.2 x 2.5 x 0.8		33
CPX-22	2.5 x 2.0 x 0.45		34
CPX-21	2.0 x 1.6 x 0.45		35

digital electronic gmbh • Tel.: +49 (0) 8221/708-0 • Fax: +49 (0) 8221/708-80

CPX-11	1.6 x 1.2 x 0.40		36
Uhrenquarze / Low Frequency Tuning Fork Crystals			
TC-38 **TC-26** **TC-15**	Ø 3.0 x 8.2 Ø 2.1 x 6.2 Ø 1.5 x 5.1		37
MM-25S	8.0 x 3.8 x 2.5		38
MM-20SS	8.0 x 3.8 x 2.5		39
MM-11B	6.9 x 1.4 x 1.3		40
TSM-250 **TC-26**	Ø 2.0 x 6.1/9.1 Ø 2.1 x 6.2		41
TSM-26B	Ø 2.0 x 6.1/9.1		42
TSM-26BJ	2.95 x 2.3 x 6.5/9.0	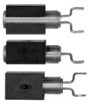	43
CMJ-206	6.0/8.3 x 2.5 x 2.1		44
CM-519	4.9 x 1.8 x 1.0		45
CM-415	4.1 x 1.5 x 0.9		46
CM-315	3.2 x 1.5 x 0.9		47
CM-212	2.0 x 1.2 x 0.6		48

OSZILLATOREN / OSCILLATORS

bedrahtet / through-hole

DIL-14	20.2 x 12.8 x 5.5		49 -50
DIL-8	12.5 x 12.5 x 5.5		
DIL-14 TSW	20.2 x 12.8 x 5.08		
DIL-8 TSW	12.5 x 12.5 x 5.5		

SMD

SMD-1100S	14.0 x 9.8 x 4.7		51
SCO-700 Series	7.0 x 5.0 x 1.5/1.4		52 -53
SCO-735/LV-PECL	7.0 x 5.0 x 1.8	 *	54
SCO-735/LVDS	7.0 x 5.0 x 1.8		54
SCO-735/HCSL	7.0 x 5.0 x 1.8		54
SCO-735 SS	7.0 x 5.0 x 1.6		55
SCO-75 HF	7.0 x 5.0 x 1.4		56
SCO-75 TSW	7.0 x 5.0 x 1.4		57
SCO-53	5.0 x 3.2 x 1.3	 *	58
SCO-53 1.0 V	5.0 x 3.2 x 1.3		59
SCO-53 SS	5.0 x 3.2 x 1.2		60
SCO-53 HF	5.0 x 3.2 x 1.2		61
SCO-53 TSW	5.0 x 3.2 x 1.2		62
SCO-32	3.2 x 2.5 x 1.2		63
SCO-22	2.5 x 2.0 x 0.9		64
SCO-20	2.0 x 1.6 x 0.8		65
SCO-16	1.6 x 1.2 x 0.7		66

SMD Programmable

SCO-75P	7.0 x 5.0 x 1.5		67
SCO-53P	5.0 x 3.2 x 1.3		
SCO-32P	3.2 x 2.5 x 1.2		
SCO-22P	2.5 x 2.0 x 0.9		

Temperature Compensated & Voltage Controlled

VXO-61 • VXO-63	20.4 x 12.9 x 5.08		68

* Abbildung ähnlich.

All specifications subject to change without notice.

digital electronic gmbh • Tel.: +49 (0) 8221/708-0 • Fax: +49 (0) 8221/708-80

Temperature Compensated & Voltage Controlled

VXO-81 • VXO-83	12.9 x 12.9 x 5.6		69
VC-TCXO-801	11.4 x 9.6 x 1.85		70
VC-TCXO-802	11.4 x 9.6 x 1.85		71
VXO-S1 • VXO-S3	7.0 x 5.0 x 1.8		72
VCXO-705CC	7.0 x 5.0 x 1.8		73
VC-SQO-735/LV-PECL 7.0 x 5.0 x 1.8/5.0 x 3.2 x 1.8 **VC-SQO-735/LVDS** 7.0 x 5.0 x 1.8/5.0 x 3.2 x 1.8 **VC-SQO-735/HCMOS** 7.0 x 5.0 x 1.8/5.0 x 3.2 x 1.8			74
VCO-705N • VCO-705T	7.0 x 5.0 x 1.7		75
VXO-T1 • VXO-T3	5.0 x 3.2 x 1.7		76
VCXO-3225	3.2 x 2.5 x 1.0		77
TXO-503 • VTXO-503	5.0 x 3.2 x 1.0		78
TXO-320 • VTXO-320	3.2 x 2.5 x 0.9		79

■ RESONATOREN / RESONATORS

ZTB Series	see Table		80
ZTBY Series	7.9 x 9.3 x 3.6 7.0 x 9.0 x 3.5 5.2 x 6.8 x 2.8		81
ZTT Series	10.0 x 10.0/15.0	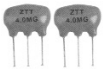	82
ZTA Series	10.0 x 10.0/15.0		83
ZTACC/ZTTCC MG • ZTA&ZTTCS/CV MT **ZTA&ZTTCS/ CV / CW MX**	see Table		84

digital electronic gmbh • Tel.: +49 (0) 8221/708-0 • Fax: +49 (0) 8221/708-80

EINLEITUNG

Quarz – chemisch spezifiziert als SiO_2 (Siliziumdioxid), ist ein piezoelektrisches Material in einer kristalinen Form. Mechanischer Einfluß auf die kristaline Struktur verursacht elektrische Ladungsverschiebungen auf ihrer Oberfläche und umgekehrt. Diese piezoelektrische Charakteristik des Minerals, zusammen mit der Stabilität der physikalischen Parameter führt dazu, daß der Stoff zu dem wichtigsten Rohmaterial für die Herstellung frequenzbestimmender und frequenzselektierender Bauteile wie Schwingquarze, Quarzoszillatoren, Filter und sonstigen Taktgebern wurde seit über 50 Jahren.

Da der Rohstoff für diese Schwingungsgeber nur selten in der Natur vorkommt, wird er heute fast ausschließlich synthetisch für industrielle Anwendungen hergestellt.

Der synthetische Quarzrohstoff wächst regelrecht in sog. „Autoclaves" bei ca. +400°C und Drücken von ca. 10.000 N/cm^2. Entscheidend für die spätere Güte (Q-Factor) des Quarzes und seiner Stabilität ist u.a. die Reinheit des SiO_2.

Das Quarzblank, die geschliffene Quarzscheibe, ist der wesentliche Teil des fertigen Quarzbauteiles in einem hermetisch dichten Gehäuse (sog. Cap.), gefaßt von zwei Electroden (sog. Base), verschlossen unter Stickstoffatmosphäre (N_2), um Umwelteinflüsse und Oxidation durch Luftsauerstoff gering zu halten, somit günstiges Alterungsverhalten und langlebigen Einsatz bei hoher Stabilität zu gewährleisten.

Elektrisch gesehen verhält sich ein Quarz in einer Schaltung wie ein Schwingkreis in Resonanz, also z. B. wie ein Schwingkreis bestehend aus Spule und Kondensator, nur mit dem Unterschied, daß der Quarz eine ganz geringe Dämpfung aufweist, also einen wesentlich höheren Q-Factor im Vergleich zu einer anderen Schwingkreisschaltung besitzt.

Diese sehr geringe Dämpfung stellt jedoch wiederum einige Anforderungen an die Beschaltung des Quarzbauteiles, um seine günstigen Eigenschaften wie leichtes Anschwingverhalten , hohe Stabilität, kleine Temperaturdrift und minimale Dämpfung nicht zu beeinträchtigen.

Unsere Quarzbauteile, ob Fundamental Quarz oder Oberton-quarz, eignen sich für alle Anwendungen, wo Schwingungsgeber benötigt werden, u.a. für Microprozessortaktung, Funkgeräte, Telephone, Radio- und Fernsehgeräte, Fahrzeuge, Flugzeuge, etc.

Unsere Quarze sind verfügbar als:

- Standard- und Sonderfrequenzen
- bedrahtet oder oberflächenmontierbar
- kleinste Frequenztoleranzen (Streuungen)
- geringste Temperaturcoeffizienten
- erweiterte Temperaturbereiche
- Sondergehäuse
- Anschlüsse gesickt, gecrimpt, gebogen oder geschnitten
- Verpackungen neben lose auch radial gegurtet, geblistert, auf Rolle oder im Ammo Pack.

Quarze werden, neben der Hauptanwendung von Schwingungs-erzeugung, wegen des linearen Temperaturverlaufes auch ver-wendet zur Messung von Temperaturen. Eine neue Anwendung stellt die Erkennung von Gasen dar aufgrund minimaler Frequenz-änderung bei unterschiedlicher Gasumgebung um das „Blank“.

digital electronic gmbh • Tel.: +49 (0) 8221/708-0 • Fax: +49 (0) 8221/708-80

DEFINITION

1. Frequenz

Die Frequenz – auch oft Nennfrequenz, Mittenfrequenz oder Nominalfrequenz genannt – ist die Zahl der Schwingungen bei Resonanz auf die das Blank abgeglichen ist unter Verwendung einer bestimmten Lastkapazität, die dem Quarz über Elektroden „angehängt" wird, und die diejenige Kapazität simuliert bzw. ersetzt, die er später in seiner endgültigen Schaltung erhält. Die Frequenz wird in Hertz (Hz), Kilohertz (kHz) oder Megahertz (MHz) angegeben. Der Frequenzabgleich hat eine gewisse Streuung.

2. Frequenztoleranz (Streuung)

Die Frequenztoleranz, oft auch Calibration oder Deviation genannt, ist die max. zulässige Abweichung von der Nominalfrequenz des Quarzes, gemessen bei Raumtemperatur (+25°C).

Die Frequenztoleranz wird in ± . . . ppm (10^{-6}) angegeben, bezogen auf die Nominalfrequenz.

Die Streuung ist eine statistische Größe, die der Normalverteilung folgt. Quarze, die außerhalb einer geforderten Frequenztoleranz liegen, werden nach Messung ausselektiert.

Die Frequenztoleranz wird durch eine 100% Messung aller gefertigten Teile festgestellt und selektiert.

3. Temperaturkoeffizient

Der Temperaturkoeffizient, oft auch Temperaturdrift genannt, ist die max. zulässige Abweichung der tatsächlichen Frequenz über einen festzulegenden Temperaturbereich (z. B. -10°C bis +60°C) bezogen auf die Nominalfrequenz des Quarzes.

Der Temperaturkoeffizient ist abhängig u.a. von der Reinheit des Rohstoffes SiO_2, von der Maßhaltigkeit des Schnittwinkels durch die Gitterstruktur des Minerals und von der Art des Schnittes (z. B. AT-CUT, BT-CUT, CT-CUT, etc.)

digital electronic gmbh • Tel.: +49 (0) 8221/708-0 • Fax: +49 (0) 8221/708-80

4. Schnittwinkel

AT-CUT

Ein empirisch gefundener Schnittwinkel durch eine Gitterstruktur des SiO_2 Materials zeigt außergewöhnlich stabiles Temperaturverhalten, symmetrisch zur Raumtemperatur von +25°C. Dieser Schnittwinkel wird AT-CUT genannt.

Der AT-CUT wird am meisten verwendet wegen seines günstigen Temperaturkoeffizienten, läßt sich jedoch nicht für jede Frequenz darstellen. AT-CUT Quarze sind theoretisch zwischen 700 kHz bis ca. 80.0 MHz herstellbar, wobei AT-CUT im Fundamental-Mode bis 36.0 MHz herstellbar ist, darüber in entsprechenden Obertönen. Das Schaltungsdesign im Oberton bedarf etwas höheren Aufwandes.

BT-CUT

Der BT-CUT Quarz hat eine nach unten geöffnete parabolische Charakteristik (also stets negative Abweichung von der Nominalfrequenz) und keinen so günstigen Temperaturcoeffizienten wie AT-CUT Quarze.

Der Temperaturkoeffizient wird in -… ppm / $°C^2$ angegeben.

Für hohe Frequenzen, die im Fundamental-Mode betrieben werden sollen, kommen BT-CUT Quarze zum Einsatz.

CT-CUT

CT-CUT Quarze haben ebenfalls eine parabolische Temperaturcharakteristik mit stets negativen Temperaturkoeffizienten. Sie werden meist für niedrige Frequenzen im kHz-Bereich verwendet, am häufigsten für Uhrenquarze und Funkuhrquarze sowie für Sonderanwendungen.

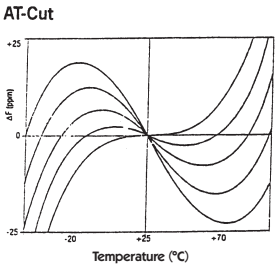

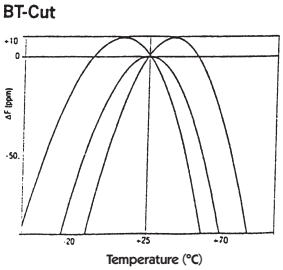

5. Lastkapazität

Die Lastkapazität ist nicht eine „quarzimmanente“ Größe, sondern diejenige Kapazität, auf die der Quarz bei der Herstellung abgeglichen wird. Die Quarzfrequenz wird bei „angehängter“ Lastkapazität eingestellt. Diese Lastkapazität sollte der Quarz später in seiner endgültigen Applikation, wo er zum Einsatz kommt, wieder vorfinden in seiner Schaltung. Falls dieser Abgleich bei der Herstellung auf die später vorzufindende kapazitive Last nicht richtig vorgenommen wird, schwingt der Quarz „neben“ seiner Nominalfrequenz.

Da in den meisten Schaltungen keine Ziehkapazität zu einem individuellen Abgleich mehr eingesetzt wird, ist die richtige Lastkapazität wichtig, zumindest wenn es auf präzise Einhaltung der Nominalfrequenz innerhalb der zulässigen Toleranzen ankommt.

Eine zu niedrige kapazitive Last bedeutet, der Quarz schwingt oberhalb der Nominalfrequenz, eine zu hohe kapazitive Last bedeutet, der Quarz schwingt unterhalb der Nominalfrequenz.

Grundsätzlich schwingen Quarze, die für hohe Lastkapazitäten ausgelegt sind, stabiler, schwingen jedoch nicht so leicht an und sind nur in einem kleineren Bereich zu ziehen (kleinere Pullability), dagegen Quarze, die für kleinere Lastkapazitäten konzipiert sind, schwingen leichter an, sind in einem größeren Bereich zu ziehen (hohe Pullability), schwingen jedoch nicht ganz so stabil auf der Nominalfrequenz.

Die Lastkapazität macht den Quarz eigentlich zu einem kundenspezifischen Bauteil, bzw. einem „semi-customized-component“, da die jeweilige kapazitive Last der Kundenapplikation in die Quarzparameter und somit in die Fertigung des Quarzbauteiles mit eingeht.

6. Streukapazität

Die Streukapazität, auch Shuntkapazität genannt, trägt dem Umstand Rechnung, daß ein Quarzbauteil aufgrund seiner Konstruktion auch in gewisser Weise ein kleiner Kondensator ist, da er zwei Elektroden mit einem Dielektrikum verbindet (z. B. die Luft zwischen den Anschlußbeinen).

digital electronic gmbh • Tel.: +49 (0) 8221/708-0 • Fax: +49 (0) 8221/708-80

Hierdurch ergibt sich eine kleine Kapazität um 2 pF bis 7 pF, die kapazitiv die Schaltung beeinflußt und bei der Schaltungsentwicklung u.U., insbesondere in HF-Anwendungen, berücksichtigt werden muß.

7. Nennbelastung

Die Nennbelastung, oft auch Drive Level genannt, stellt die Verlustleistung dar, die der Quarz aufgrund des zwar geringen, jedoch vorhandenen Stromflusses aushält (max. Nennbelastung). Es gibt außer einer max. Nennbelastung auch eine typische Nennbelastung mit der der Quarz betrieben werden soll, da dies der Wert ist, mit der der Quarz im Ausgangstest gemessen wurde und so die beste Reproduktion aller Parameter sichergestellt ist.

8. Ersatzschaltbild

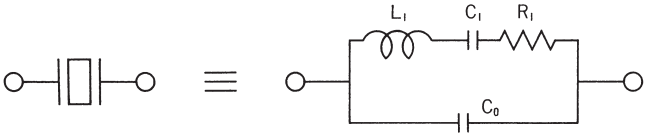

9. Widerstand

Der Widerstand, oft auch ESR (Equivalent Series Resistance) genannt, ist der rein ohmsche Widerstand, den der Quarz bei Resonanz hat. Kleinere Frequenzen haben deutlich höhere Widerstände als größere Frequenzen.

Quarze mit Frequenzen > 6.0 MHz im AT-CUT haben dann fast gleichbleibende ESR's mit ca. 40 Ω , wobei hier auch Streuungen nach statistischen Grundsätzen auftreten.
Oft wird in empfindlichen Schaltungen ein max. ESR vorgegeben, der rein selektiv dargestellt wird.

Der Widerstand ist auch ein Maß für die Güte (Q-Factor) des Quarzes, je kleiner der ESR desto größer der Q-Factor.

digital electronic gmbh • Tel.: +49 (0) 8221/708-0 • Fax: +49 (0) 8221/708-80

FREQUENZÜBERSICHT (STANDARDFREQUENZEN)

Frequenz	Frequenz	Frequenz
32.768 kHz	10.752000 MHz	26.670000 MHz
77.500 kHz	11.000000 MHz	26.740000 MHz
1.000000 MHz	11.059200 MHz	26.975000 MHz
1.843200 MHz	11.700000 MHz	26.995000 MHz
2.000000 MHz	12.000000 MHz	27.000000 MHz
2.048100 MHz	12.000393 MHz	27.015000 MHz
2.097152 MHz	12.096000 MHz	27.090000 MHz
2.400000 MHz	12.288000 MHz	27.095000 MHz
2.457600 MHz	12.750000 MHz	27.105000 MHz
2.500000 MHz	12.865625 MHz	27.120000 MHz
2.560000 MHz	12.920000 MHz	27.125000 MHz
3.000000 MHz	13.104000 MHz	27.195000 MHz
3.072000 MHz	13.543375 MHz	27.650000 MHz
3.200000 MHz	13.560000 MHz	29.491200 MHz
3.276800 MHz	13.875000 MHz	29.875000 MHz
3.300000 MHz	14.000000 MHz	30.000000 MHz
3.342300 MHz	14.187500 MHz	30.420000 MHz
3.342336 MHz	14.318180 MHz	30.445000 MHz
3.579545 MHz	14.745600 MHz	30.875000 MHz
3.600000 MHz	14.850000 MHz	30.900000 MHz
3.686400 MHz	15.000000 MHz	31.330000 MHz
3.932160 MHz	15.360000 MHz	32.000000 MHz
4.000000 MHz	16.000000 MHz	33.868000 MHz
4.032000 MHz	16.384000 MHz	35.469000 MHz
4.096000 MHz	16.400000 MHz	35.910000 MHz
4.194304 MHz	16.500000 MHz	36.000000 MHz
4.433200 MHz	16.588000 MHz	38.970000 MHz
4.433600 MHz	16.615000 MHz	38.975000 MHz
4.433619 MHz	17.000000 MHz	39.000000 MHz
4.915200 MHz	17.200000 MHz	39.145000 MHz
5.000000 MHz	17.325000 MHz	39.168000 MHz
5.068800 MHz	17.472000 MHz	39.190000 MHz
5.185000 MHz	17.720000 MHz	39.195000 MHz
5.242880 MHz	17.734475 MHz	40.000000 MHz
6.000000 MHz	17.900000 MHz	40.225000 MHz
6.144000 MHz	18.000000 MHz	40.230000 MHz
6.400000 MHz	18.432000 MHz	40.320000 MHz
6.553600 MHz	18.869600 MHz	40.675000 MHz
6.750000 MHz	19.660800 MHz	40.685000 MHz
6.775780 MHz	19.669800 MHz	41.140000 MHz
6.780000 MHz	20.000000 MHz	42.250000 MHz
7.159000 MHz	20.250000 MHz	44.433300 MHz
7.372800 MHz	20.275200 MHz	44.545000 MHz
7.680000 MHz	20.284000 MHz	48.000000 MHz
8.000000 MHz	20.480000 MHz	49.860000 MHz
8.064000 MHz	21.740000 MHz	50.000000 MHz
8.192000 MHz	21.855000 MHz	51.000000 MHz
8.388608 MHz	21.960000 MHz	52.812000 MHz
8.863200 MHz	22.118400 MHz	53.666000 MHz
8.867238 MHz	22.198400 MHz	60.000000 MHz
9.216000 MHz	22.640000 MHz	61.875000 MHz
9.599000 MHz	24.000000 MHz	66.000000 MHz
9.600000 MHz	24.000140 MHz	69.250000 MHz
9.830400 MHz	24.576000 MHz	72.160000 MHz
10.000000 MHz	25.000000 MHz	100.00000 MHz
10.240000 MHz	26.540000 MHz	125.00000 MHz

All specifications subject to change without notice.

digital electronic gmbh • Tel.: +49 (0) 8221/708-0 • Fax: +49 (0) 8221/708-80

HC-51/U • HC-33/U
LOW FREQUENCY CRYSTAL

Dimensions (Units: mm)

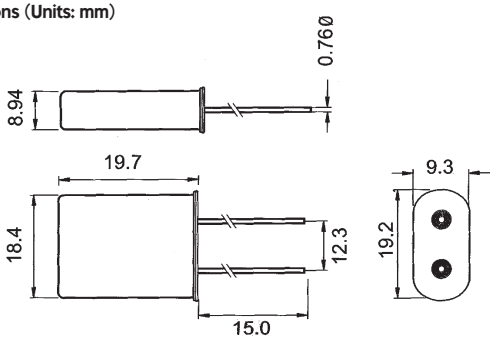

18.4 x 9.3 x 19.7

FEATURES

1. Wide frequency range.
2. Resistance weld.
3. Tight tolerance and stability over temperature.
4. Metal package / holder.

APPLICATION

Microprocessor Systems, Data Communications,
Consumer Electronics, Automotive Electronics.

ELECTRICAL SPECIFICATIONS		
Model	**HC-51/U** (also known as **HC-33/U**)	
Frequency Range	455.0 kHz ~ 756.8 kHz	0.8 MHz~ 4.5 MHz
Frequency Tolerance (at +25°C)	±30 ppm (±0.003%) ±50 ppm (±0.005%)	
Frequency Stability	±100 ppm (±0.01%) (-10°C to +60°C)	±30 ppm (±0.01%) (-10°C to +60°C)
Crystal Cut	SL-cut	AT-cut
Load Capacitance (C_L)	20 pF, 30 pF, etc. (Customer Spec.)	
Drive Level	1000 µW max.	
Shut Capacitance (Co):	7 pF max.	
Operating Temperature Range	-10°C to +60°C, -40°C to +85°C option	
Aging (at +25°C) first year	±7 ppm (±0.0007%) / year max.	

HC-49/U
CRYSTAL

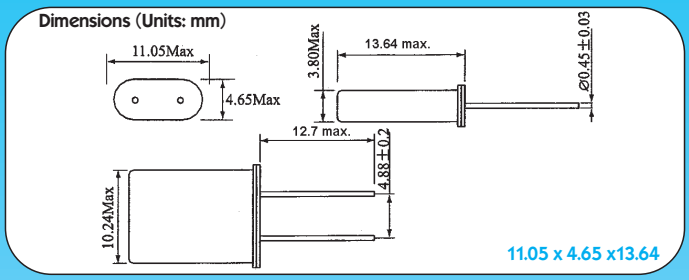

FEATURES

1. Metal package / holder.
2. Low profile, low cost.
3. Industry standard.

ELECTRICAL SPECIFICATIONS	
Model	**HC-49/U**
Frequency Range	1.0 MHz ~ 200.0 MHz
Frequency Tolerance (at +25°C)	±10 ppm / ±30 ppm / ±50 ppm
Frequency Stability	±10 ppm / ±30 ppm / ±50 ppm
Load Capacitance (C_L)	10 pF ~ Series (Customer Spec.)
Drive Level	100 µW (500 µW max.)
Equivalent Series Resistance	see Table 1
Shunt Capacitance	7 pF max.
Operating Temperature Range	-20°C to +70°C, -40°C to +85°C option
Storage Temperature Range	-40°C to +85°C
Insulation Resistance	500 MΩ min. at 100 V_{DC}
Aging (at +25°C) first year	±5 ppm / year max.

Table 1

EQUIVALENT SERIES RESISTANCE (ESR) AND OSCILLATION MODE		
Frequency Range	**ESR Ω max.**	**Mode / Cut**
1.000 MHz ~ 1.799 MHz	5000	Fundamental / SL
1.800 MHz ~ 2.999 MHz	400	Fundamental / AT
3.000 MHz ~ 3.999 MHz	200	Fundamental / AT
4.000 MHz ~ 4.999 MHz	150	Fundamental / AT
5.000 MHz ~ 5.999 MHz	120	Fundamental / AT
6.000 MHz ~ 6.999 MHz	100	Fundamental / AT
7.000 MHz ~ 8.999 MHz	80	Fundamental / AT
9.000 MHz ~ 12.999 MHz	60	Fundamental / AT
13.000 MHz ~ 15.999 MHz	50	Fundamental / AT
16.000 MHz ~ 19.999 MHz	40	Fundamental / AT
20.000 MHz ~ 29.999 MHz	30	Fundamental / AT
30.000 MHz ~ 69.999 MHz	100	3rd Overtone / AT
70.000 MHz ~ 99.999 MHz	40	3rd Overtone / AT
100.000 MHz ~ 200.000 MHz	70	5th Overtone / AT

digital electronic gmbh • Tel.: +49 (0) 8221/708-0 • Fax: +49 (0) 8221/708-80

HC-49/U-S • HC-49/U-S-K
CRYSTAL

Dimensions (Units: mm)

HC-49/U-S 2 pins

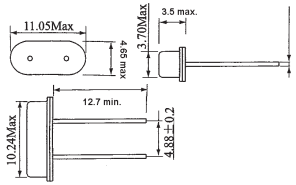

11.05 x 4.65 x16.2

HC-49/U-S-K 3 pins

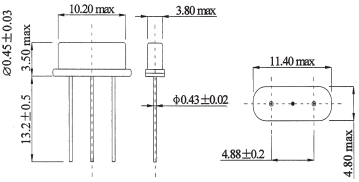

11.4 x 4.8 x16.7

FEATURES

1. Metal package / holder.
2. Low profile, low cost.
3. Industry standard.

ELECTRICAL SPECIFICATIONS		
Model	**HC-49/U-S**	**HC-49/U-S-K**
Frequency Range	3.2 MHz ~ 100.0 MHz	
Frequency Tolerance (at +25°C)	±10 ppm / ±30 ppm / ±50 ppm	
Frequency Stability	±10 ppm / ±30 ppm / ±50 ppm	
Load Capacitance (C_L)	10 pF ~ Series (Customer Spec.)	
Drive Level	100 μW (500 μW max.)	
Equivalent Series Resistance	see Table 1	
Shunt Capacitance	7 pF max.	
Operating Temperature Range	-10°C to +60°C, -20°C to +70°C, -40°C to +85°C option	
Storage Temperature Range	-40°C to +85°C	
Insulation Resistance	500 MΩ min. at 100 V_{DC}	
Aging (at +25°C) first year	±5 ppm / year max.	

Table 1

EQUIVALENT SERIES RESISTANCE (ESR) AND OSCILLATION MODE		
Frequency Range	**ESR Ω max.**	**Mode / Cut**
3.200 MHz ~ 4.499 MHz	150	Fundamental / AT
4.500 MHz ~ 5.999 MHz	120	Fundamental / AT
6.000 MHz ~ 6.999 MHz	100	Fundamental / AT
7.000 MHz ~ 7.999 MHz	90	Fundamental / AT
8.000 MHz ~ 8.999 MHz	80	Fundamental / AT
9.000 MHz ~ 9.999 MHz	60	Fundamental / AT
10.000 MHz ~ 12.999 MHz	50	Fundamental / AT
13.000 MHz ~ 29.999 MHz	40	Fundamental / AT
30.000 MHz ~ 70.000 MHz	80	3rd Overtone / AT
27.000 MHz ~ 40.000 MHz	40	Fundamental / BT

CSA-310 • CSA-309
HIGH FREQUENCY CRYSTAL

Dimensions (Units: mm)

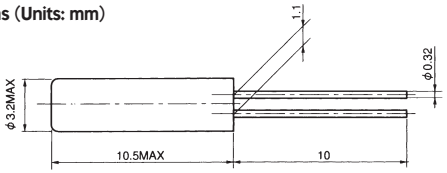

CSA-310

Ø 3.2 x 10.5

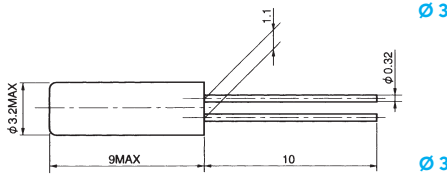

Ø 3.2 x 9.0

CSA-309

FEATURES

1. The units are high-performance, miniature crystal units manufactured with Citizen's ultrahigh-precision processing technology.
2. High stability has been gained through vacuum sealing.
3. Outstanding vibration resistance, shock resistance and enviromental chracteristics.
4. Cylinder type metal package / holder.

APPLICATION

Can be used for a wide range of applications including use in AV equipment, OA equipment, communication equipment and measuring instruments.

ELECTRICAL SPECIFICATIONS			
Model		**CSA-310**	**CSA-309**
Nominal Frequency	fo	3.5 MHz ~ 4.0 MHz	4.0 MHz ~ 70.0 MHz
Frequency Tolerance (at +25°C)	Δf/fo	± 20 ppm / ± 30 ppm / ± 50 ppm	
Frequency Stability	Δf/fo	±30 ppm / ±50 ppm	
Operating Temperature Range	T_{ORP}	-10°C to +60°C, –40°C to +85°C option	
Storage Temperature Range	T_{STG}	–40°C to +85°C	
Equivalent Series Resistance	R_1	30 Ω ~ 200 Ω	
Load Capacitance	C_L	16 pF typical (Customer Spec.)	
Shunt Capacitance	Co	5.0 pF max.	
Drive Level	DL	100 μW (500 μW max.)	
Insulation Resistance	IR	500 MΩ min. / DC 100 V ± 15 V	
Aging (at +25°C) first year	Δf/fo	±5 ppm / year max.	
Sealing		1×10^{-2} μPa · m^3/s max.	

All specifications subject to change without notice.

digital electronic gmbh • Tel.: +49 (0) 8221/708-0 • Fax: +49 (0) 8221/708-80

UM-1
HIGH PRECISION CRYSTAL

Dimensions (Units: mm) Package: UM-1

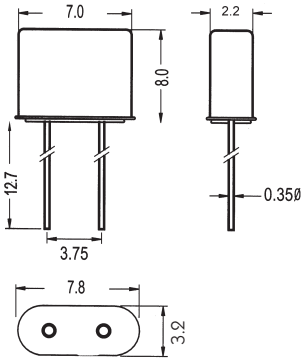

7.0 x 2.2 x 8.0

FEATURES

1. Wide frequency range.
2. Tight tolerance and stability over temperature.
3. Miniature and compact.
4. Metal package / holder.

APPLICATION

Ideal for telecommunications such as pagers (beepers), hand-held radios.

ELECTRICAL SPECIFICATIONS		
Model	**UM-1**	
Frequency Range	1.0 MHz~1.2 MHz	4.0 MHz ~ 200.0 MHz
Crystal Cut	SL-cut	AT-cut
Load Capacitance (C_L)	8 pF ~ 32 pF, Series (Customer Spec.)	
Drive Level	100 µW (500 µW max.)	
Frequency Tolerance (at +25°C)	±50 ppm	±3 ppm/±5 ppm/ ±10 ppm/±20 ppm/±30 ppm
Equivalent Series Resistance	25 Ω ~ 5000 Ω max.	
Frequency Stability	±100 ppm	±5 ppm/±10 ppm/ ±15 ppm/±20 ppm/ ±25 ppm/±30 ppm/ ±50 ppm/±100 ppm
Operating Temperature Range	-10°C to +60°C, -20°C to +70°C, -40°C to +85°C option	
Storage Temperature Range	-50°C to +105°C	
Aging (at +25°C) first year	±3 ppm / year max.	

OPTIONS: Also availble as SMD crystal (gullwing with metal jacket) - UM-1/MJ.
Auch in SMD Version verfügbar (Gullwing mit Metal Jacket) - UM-1/MJ.

digital electronic gmbh • Tel.: +49 (0) 8221/708-0 • Fax: +49 (0) 8221/708-80

UM-5
HIGH PRECISION CRYSTAL

Dimensions (Units: mm) Package: UM-5

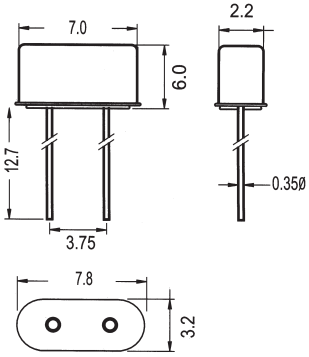

7.0 x 2.2 x 6.0

FEATURES

1. Wide frequency range.
2. Tight tolerance and stability over temperature.
3. Miniature and compact.
4. Metal package / holder.

APPLICATION

Ideal for telecommunications such as pagers (beepers), hand-held radios.

ELECTRICAL SPECIFICATIONS	
Model	**UM-5**
Frequency Range	10.0 MHz ~ 200.0 MHz
Crystal Cut	AT-cut
Load Capacitance (C_L)	8 pF ~ 32 pF, Series (Customer Spec.)
Drive Level	100 µW (500 µW max.)
Frequency Tolerance (at +25°C)	±3 ppm / ±5 ppm / ±10 ppm / ±20 ppm / ±30 ppm
Equivalent Series Resistance	30 Ω ~ 150 Ω max.
Frequency Stability	±5 ppm / ±10 ppm / ±15 ppm / ±20 ppm / ±25 ppm / ±30 ppm / ±50 ppm / ±100 ppm
Operating Temperature Range	-10°C to +60°C, -20°C to +70°C, -40°C to +85°C option
Storage Temperature Range	-50°C to +105°C
Aging (at +25°C) first year	±3 ppm / year max.

OPTIONS: Also availble as SMD crystal (gullwing with metal jacket) - UM-5/MJ.
Auch in SMD Version verfügbar (Gullwing mit Metal Jacket) - UM-5/MJ.

digital electronic gmbh • Tel.: +49 (0) 8221/708-0 • Fax: +49 (0) 8221/708-80

HC-49/MJ
SMD CRYSTAL

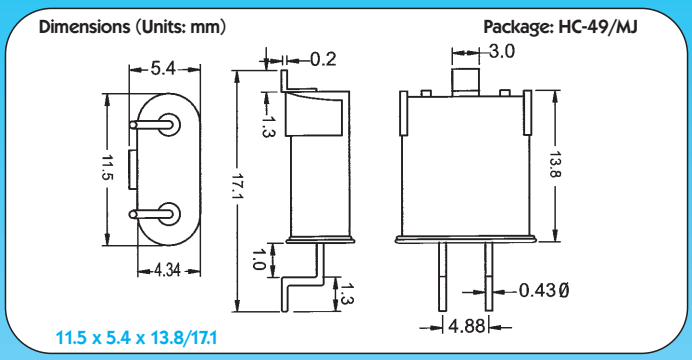

FEATURES

1. HC-49/MJ is HC-49/U Lead-bent gull wing type with metal jacket for easy surface mounting.
2. Wide frequency range.
3. Only available SMD-type of low frequency crystals (1.0 ~ 3.2 MHz).

ELECTRICAL SPECIFICATIONS	
Model	**HC-49/MJ**
Frequency Range	1.0 MHz ~ 200.0 MHz
Load Capacitance (C_L)	10 pF ~ Series (Customer Spec.)
Drive Level	100 µW (500 µW max.)
Frequency Tolerance (at +25°C)	±10 ppm / ±30 ppm / ±50 ppm
Frequency Stability	±10 ppm / ±30 ppm / ±50 ppm
Equivalent Series Resistance	see Table 1
Shunt Capacitance	7 pF max.
Operating Temperature Range	-20°C to +70°C, -40°C to +85°C option
Storage Temperature Range	- 40°C to + 85°C
Insulation Resistance	500 MΩ min. at 100 V_{DC}
Aging (at +25°C) first year	±5 ppm / year max.

Table 1

EQUIVALENT SERIES RESISTANCE (ESR) AND OSCILLATION MODE		
Frequency Range	**ESR Ω max.**	**Mode / Cut**
1.000 MHz ~ 1.799 MHz	5000	Fundamental / SL
1.800 MHz ~ 2.999 MHz	400	Fundamental / AT
3.000 MHz ~ 3.999 MHz	200	Fundamental / AT
4.000 MHz ~ 4.999 MHz	150	Fundamental / AT
5.000 MHz ~ 5.999 MHz	120	Fundamental / AT
6.000 MHz ~ 6.999 MHz	100	Fundamental / AT
7.000 MHz ~ 8.999 MHz	80	Fundamental / AT
9.000 MHz ~ 12.999 MHz	60	Fundamental / AT
13.000 MHz ~ 15.999 MHz	50	Fundamental / AT
16.000 MHz ~ 19.999 MHz	40	Fundamental / AT
20.000 MHz ~ 29.999 MHz	30	Fundamental / AT
30.000 MHz ~ 69.999 MHz	100	3rd Overtone / AT
70.000 MHz ~ 99.999 MHz	40	3rd Overtone / AT
100.000 MHz ~ 200.000 MHz	70	5th Overtone / AT

UM-1/MJ
HIGH PRECISION SMD CRYSTAL

Dimensions (Units: mm) Package: UM-1/MJ

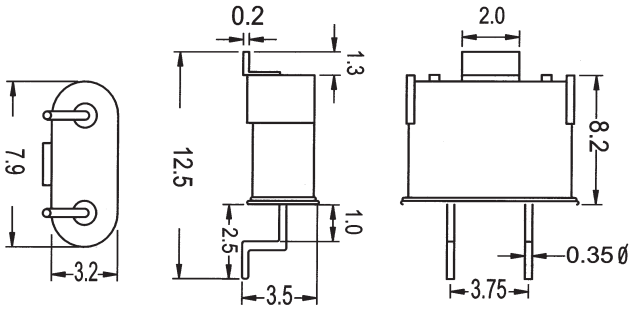

7.9 x 3.5 x 8.2/12.5

FEATURES

1. UM-1/MJ is UM-1 lead-bent gull wing type with metal jacket for easy surface mounting.
2. Wide frequency range.
3. Tight tolerance and stability over temperature.
4. Miniature and compact.

APPLICATION

Ideal for telecommunications such as pagers (beepers), hand-held radios.

ELECTRICAL SPECIFICATIONS		
Model	**UM-1/MJ**	
Frequency Range	1.0 MHz~1.2 MHz	4.0 MHz ~ 200.0 MHz
Crystal Cut	SL-cut	AT-cut
Load Capacitance (C_L)	8 pF ~ 32 pF, Series (Customer Spec.)	
Drive Level	100 µW (500 µW max.)	
Frequency Tolerance (at +25°C)	±50 ppm	±3 ppm/±5 ppm/ ±10 ppm/±20 ppm/±30 ppm
Equivalent Series Resistance	25 Ω ~ 5000 Ω max.	
Frequency Stability	±100 ppm	±5 ppm / ±10 ppm / ±15 ppm / ±20 ppm / ±25 ppm / ±30 ppm / ±50 ppm / ±100 ppm
Operating Temperature Range	-10°C to +60°C, -20°C to +70°C, -40°C to +85°C option	
Storage Temperature Range	-50°C to +105°C	
Aging (at +25°C) first year	±3 ppm / year max.	

All specifications subject to change without notice.

digital electronic gmbh • Tel.: +49 (0) 8221/708-0 • Fax: +49 (0) 8221/708-80

UM-5/MJ
HIGH PRECISION SMD CRYSTAL

Dimensions (Units: mm) Package: UM-5/MJ

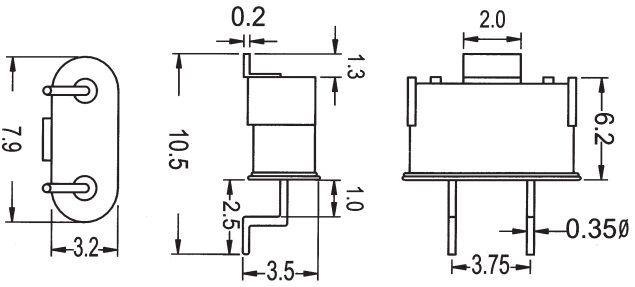

7.9 x 3.5 x 6.2/10.5

FEATURES

1. UM-5/MJ is UM-5 lead-bent gull wing type with metal jacket for easy surface mounting.
2. Wide frequency range.
3. Tight tolerance and stability over temperature.
4. Miniature and compact.

APPLICATION

Ideal for telecommunications such as pagers (beepers), hand-held radios.

ELECTRICAL SPECIFICATIONS	
Model	**UM-5/MJ**
Frequency Range	10.0 MHz ~ 200.0 MHz
Crystal Cut	AT-cut
Load Capacitance (C_L)	8 pF ~ 32 pF, Series (Customer Spec.)
Drive Level	100 µW (500 µW max.)
Frequency Tolerance (at +25°C)	±3 ppm / ±5 ppm / ±10 ppm / ±20 ppm / ±30 ppm
Equivalent Series Resistance	30 Ω ~ 150 Ω max.
Frequency Stability	±5 ppm / ±10 ppm / ±15 ppm / ±20 ppm / ±25 ppm / ±30 ppm / ±50 ppm / ±100 ppm
Operating Temperature Range	-10°C to +60°C, -20°C to +70°C, -40°C to +85°C option
Storage Temperature Range	-50°C to +105°C
Aging (at +25°C) first year	±3 ppm / year max.

All specifications subject to change without notice.

digital electronic gmbh • Tel.: +49 (0) 8221/708-0 • Fax: +49 (0) 8221/708-80

SM-49
SMD CRYSTAL

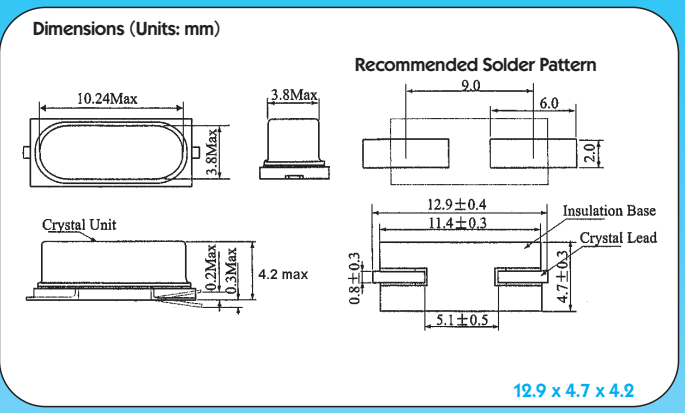

FEATURES

1. Low cost SMD application.
2. Most competitive SMD crystal.
3. Quick availability.
4. Plastic base with top metal cover.

ELECTRICAL SPECIFICATIONS	
Model	**SM-49**
Frequency Range	3.2 MHz ~ 70.0 MHz
Frequency Tolerance (at +25°C)	±10 ppm / ±30 ppm / ±50 ppm
Frequency Stability	±10 ppm / ±30 ppm / ±50 ppm
Load Capacitance (C_L)	10 pF ~ Series (Customer Spec.)
Drive Level	100 µW (500 µW max.)
Equivalent Series Resistance	see Table 1
Shunt Capacitance	7 pF max.
Operating Temperature Range	-10°C to +60°C, -20°C to +70°C, -40°C to +85°C option
Storage Temperature Range	-40°C to +85°C
Insulation Resistance	500 MΩ min. at 100 V_{DC}
Aging (at +25°C) first year	±5 ppm / year max.

Table 1

EQUIVALENT SERIES RESISTANCE (ESR) AND OSCILLATION MODE		
Frequency Range	**ESR Ω max.**	**Mode / Cut**
3.200 MHz ~ 4.499 MHz	150	Fundamental / AT
4.500 MHz ~ 5.999 MHz	120	Fundamental / AT
6.000 MHz ~ 6.999 MHz	100	Fundamental / AT
7.000 MHz ~ 7.999 MHz	90	Fundamental / AT
8.000 MHz ~ 8.999 MHz	80	Fundamental / AT
9.000 MHz ~ 9.999 MHz	60	Fundamental / AT
10.000 MHz ~ 12.999 MHz	50	Fundamental / AT
13.000 MHz ~ 29.999 MHz	40	Fundamental / AT
30.000 MHz ~ 70.000 MHz	80	3rd Overtone / AT
27.000 MHz ~ 40.000 MHz	40	Fundamental / BT

All specifications subject to change without notice.

digital electronic gmbh • Tel.: +49 (0) 8221/708-0 • Fax: +49 (0) 8221/708-80

SM 49-4
SMD CRYSTAL

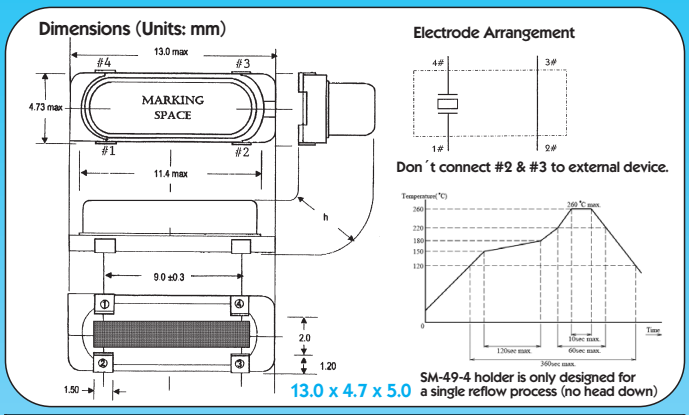

ELECTRICAL SPECIFICATIONS	
Model	**SM-49-4**
Frequency Range	3.2 MHz ~ 70.0 MHz
Frequency Tolerance (at +25°C)	±10 ppm / ±30 ppm / ±50 ppm
Frequency Stability	±10 ppm / ±30 ppm / ±50 ppm
Load Capacitance (C_L)	10 pF ~ Series (Customer Spec.)
Drive Level	100 µW (500 µW max.)
Equivalent Series Resistance	see Table 1
Shunt Capacitance	7 pF max.
Operating Temperature Range	-10°C to +60°C, -20°C to +70°C, -40°C to +85°C option
Storage Temperature Range	-40°C to +85°C
Insulation Resistance	500 MΩ min. at 100 V_{DC}
Aging (at +25°C) first year	±5 ppm / year max.

Table 1

EQUIVALENT SERIES RESISTANCE (ESR) AND OSCILLATION MODE		
Frequency Range	**ESR Ω max.**	**Mode / Cut**
3.200 MHz ~ 4.499 MHz	150	Fundamental / AT
4.500 MHz ~ 5.999 MHz	120	Fundamental / AT
6.000 MHz ~ 6.999 MHz	100	Fundamental / AT
7.000 MHz ~ 7.999 MHz	90	Fundamental / AT
8.000 MHz ~ 8.999 MHz	80	Fundamental / AT
9.000 MHz ~ 9.999 MHz	60	Fundamental / AT
10.000 MHz ~ 12.999 MHz	50	Fundamental / AT
13.000 MHz ~ 29.999 MHz	40	Fundamental / AT
30.000 MHz ~ 70.000 MHz	80	3rd Overtone / AT
27.000 MHz ~ 40.000 MHz	40	Fundamental / BT

Lowest Frequency vs max. Height	
Frequency, MHz	**Height, mm**
>20.00	4.0
>3.579	4.5
3.579	5.0

- **Footprint-compatible with: MA-406 Epson, CM-309S CITIZEN, MM-39SL DSL;**
- **Applicable for one time reflow only.**

All specifications subject to change without notice.

digital electronic gmbh • Tel.: +49 (0) 8221/708-0 • Fax: +49 (0) 8221/708-80

MM-39SL
SMD CRYSTAL

Dimensions (Units: mm)

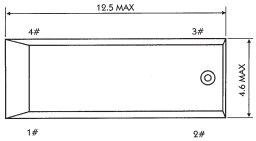

Recommended Solder Pattern

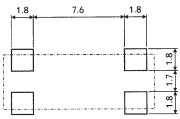

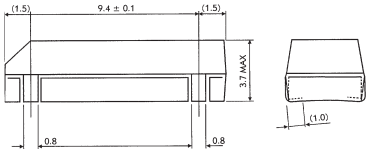

Electrode Arrangement

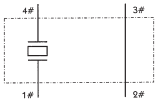

Do not connect #2 and #3 to external device.

12.5 x 4.6 x 3.7

FEATURES

Plastic package.

ELECTRICAL SPECIFICATIONS	
Model	**MM-39SL**
Frequency Range	3.579545 MHz ~ 70.0 MHz
Frequency Tolerance (at +25°C)	±30 ppm / ±50 ppm
Frequency Stability	±30 ppm / ±50 ppm
Operating Temperature Range	–10°C to +60°C, -40° to +85°C option
Equivalent Series Resistance and Oscillation Mode	3.5 ~ 4.0 MHz 200 Ω max. Fundamental 4.0 ~ 6.0 MHz 150 Ω max. Fundamental 6.0 ~ 10.0 MHz 100 Ω max. Fundamental 10.0 ~ 27.0 MHz 50 Ω max. Fundamental 27.0 ~ 36.0 MHz 100 Ω max. 3rd Overtone 36.0 ~ 70.0 MHz 80 Ω max. 3rd Overtone
Load Capacitance (C_L)	12 pF, 16 pF, 18 pF, 20 pF, 30 pF (Customer Spec.)
Shunt Capacitance	7 pF max.
Drive Level	100 µW max.
Aging (at +25°C) first year	±5 ppm / year max.

CROSS REFERENCES:

- **MA-406 EPSON**
- **CM-309S CITIZEN**

CPX-84
SMD CRYSTAL

Dimensions (Units: mm)

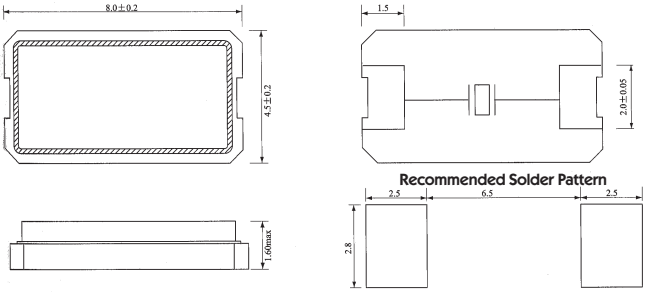

8.0 x 4.5 x 1.6

ELECTRICAL SPECIFICATIONS

Model	CPX-84
Frequency Range	6.0 MHz ~ 100.0 MHz
Frequency Tolerance (at +25°C)	±30 ppm / ±50 ppm / ± 100 ppm
Frequency Stability	±30 ppm / ±50 ppm / ± 100 ppm
Operating Temperature Range	-20°C to +70°C, -40°C to +85°C option
Equivalent Series Resistance and Oscillation Mode	6.0 ~ 9.999 MHz 120 Ω max. Fundamental 10.0 ~ 11.999 MHz 80 Ω max. Fundamental 12.0 ~ 39.999 MHz 50 Ω max. Fundamental 40.0 ~ 100.0 MHz 70 Ω max. 3rd Overtone
Load Capacitance (C_L)	10 pF ~ Series (Customer Spec.)
Shunt Capacitance	7 pF max.
Drive Level	100 µW (300 µW max.)
Shock	allowed to fall freely onto the hard wooden board from height of 75 cm
Vibration	10.0 Hz – 55.0 Hz, Amplitude 1,5 mm, applied for 30 min. in 3D (X, Y, Z)
Aging (at +25°C) first year	±5 ppm / year max.

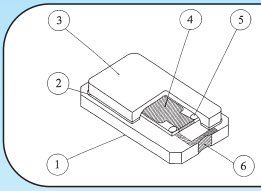

No.	Parts	Materials
①	Base	Ceramics
②	Glass	Low Temperature Glass
③	Cap	Ceramics
④	Crystal Unit	
⑤	Conductive Adhesive	Silver-Filled
⑥	Electrode	Au

Soldering Profile (Example)

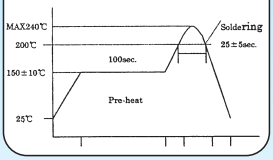

Resistance to Moisture	Test Condition	
	Temperature	+60°C (±2°C)
	Humidity	90 ~ 95 %
	Time	500 h
Soldering Conditions	**Material of Solder**	
	Kind	Eutectic solder paste
	Melting point	180°C (±5°C)
	Temp. profile of reflow soldering system	
	Peak 240°C (±5°C)	10 sec.
	Preheating 150°C, typical	100 sec., typical
	Total	200 sec., max.

All specifications subject to change without notice.

digital electronic gmbh • Tel.: +49 (0) 8221/708-0 • Fax: +49 (0) 8221/708-80

CPX-49S
SMD CRYSTAL

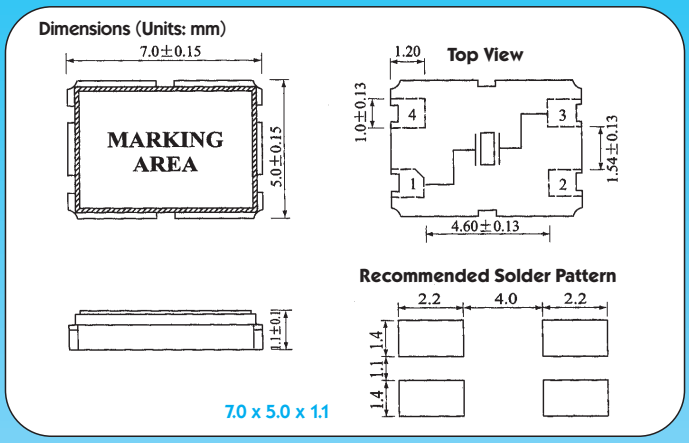

FEATURES

1. Ceramic package.
2. Seam welding.
3. SMD miniature size.
4. Wide frequency range.

APPLICATION

It is widely applied in notebook computer, PCMCIA and communication equipment.

ELECTRICAL SPECIFICATIONS	
Model	**CPX-49S**
Frequency Range	6.0 MHz ~ 125.0 MHz
Frequency Tolerance (at +25°C)	±10 ppm / ±30 ppm / ±50 ppm
Operating Temperature Range	– 20°C to +70°C, -40°C to +85°C option
Frequency Stability	±10 ppm / ±30 ppm / ±50 ppm
Equivalent Series Resistance	see Table 1
Load Capacitance (C_L)	10 pF, 12 pF, etc. (Customer Spec.)
Drive Level	100 μW (300μ W max.)
Aging (at +25°C) first year	±5 ppm / year max.

Table 1

EQUIVALENT SERIES RESISTANCE (ESR) AND OSCILLATION MODE		
Frequency Range	**ESR Ω max.**	**Mode / Cut**
6.000 MHz ~ 7.999 MHz	100	Fundamental / AT
8.000 MHz ~ 15.999 MHz	60	Fundamental / AT
16.000 MHz ~ 39.999 MHz	40	Fundamental / AT
40.000 MHz ~ 83.999 MHz	70	3rd Overtone
84.000 MHz ~ 125.0 MHz	60	3rd Overtone

All specifications subject to change without notice.

digital electronic gmbh • Tel.: +49 (0) 8221/708-0 • Fax: +49 (0) 8221/708-80

CPX-49SM
SMD CRYSTAL

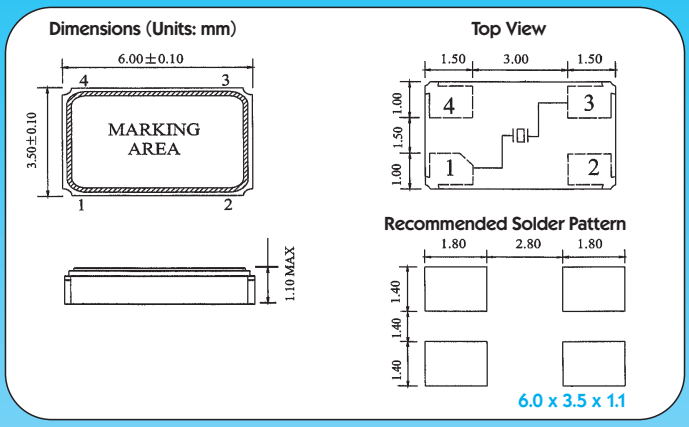

FEATURES

1. Seam welded ceramic package assures high stability and reliability.
2. Compact design.
3. Low in height 1,1 mm max. suitable for thin equipment.
4. Automatic mounting by taping and reflow soldering can be accomodated.

APPLICATION

For communication equipment, Portable telephone, PHS, IC card, GPS, and other high accuracy devices.

ELECTRICAL SPECIFICATIONS	
Model	**CPX-49SM**
Frequency Range	8.0 MHz ~ 80.0 MHz
Frequency Tolerance (at +25°C)	±10 ppm / ±30 ppm / ±50 ppm
Operating Temperature Range	– 20°C to +70°C, -40°C to +85°C option
Frequency Stability	±10 ppm / ±30 ppm / ±50 ppm
Equivalent Series Resistance	see Table 1
Load Capacitance (C_L)	10 pF ~ Series (Customer Spec.)
Drive Level	100 µW (300 µW max.)
Aging (at +25°C) first year	±2 ppm / year max.

Table 1

EQUIVALENT SERIES RESISTANCE (ESR) AND OSCILLATION MODE		
Frequency Range	**ESR Ω max.**	**Mode / Cut**
8.000 MHz ~ 9.999 MHz	100	Fundamental / AT
10.000 MHz ~ 11.999 MHz	80	Fundamental / AT
12.000 MHz ~ 15.999 MHz	60	Fundamental / AT
16.000 MHz ~ 39.999 MHz	40	Fundamental / AT
40.000 MHz ~ 80.0000 MHz	70	3rd Overtone

CPX-49SP
SMD CRYSTAL

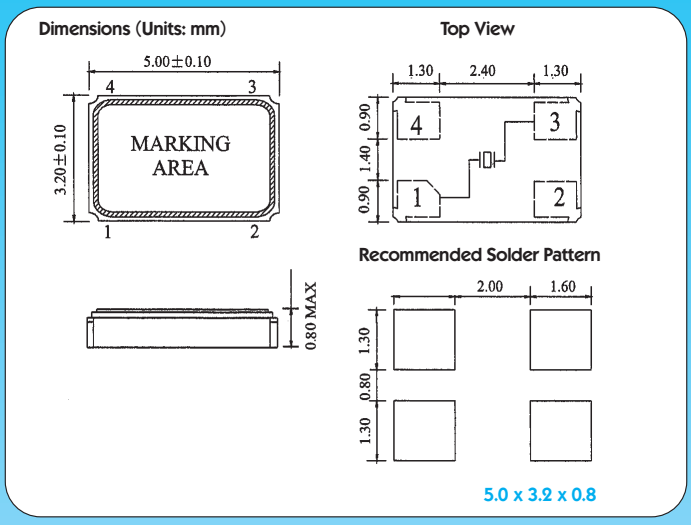

FEATURES

1. Ceramic package with seam welding.
2. Ultra miniature size.
3. Excellent heat and shock resistance.

APPLICATION

Excellent electric performance. Optimum for mobile phone and bluetooth applications.

ELECTRICAL SPECIFICATIONS	
Model	**CPX-49SP**
Frequency Range	8.0 MHz ~ 125.0 MHz
Frequency Tolerance (at +25°C)	±10 ppm / ±30 ppm / ±50 ppm
Frequency Stability	±10 ppm / ±30 ppm / ±50 ppm
Operating Temperature Range	–20°C to +70°C, -40°C to +85°C option
Equivalent Series Resistance	see Table 1
Drive Level	100 µw (300 µW max.)
Load Capacitance (C_L)	8 pF ~ Series (Customer Spec.)
Storage Temperature Range	–40°C to +85°C
Aging (at +25°C) first year	±2 ppm / year max.

Table 1

EQUIVALENT SERIES RESISTANCE (ESR) AND OSCILLATION MODE		
Frequency Range	**ESR Ω max.**	**Mode / Cut**
8.000 MHz ~ 19.999 MHz	80	Fundamental / AT
20.000 MHz ~ 29.999 MHz	70	Fundamental / AT
30.000 MHz ~ 47.999 MHz	50	Fundamental / AT
48.000 MHz ~ 125.00 MHz	70	3rd Overtone

All specifications subject to change without notice.

digital electronic gmbh • Tel.: +49 (0) 8221/708-0 • Fax: +49 (0) 8221/708-80

CPX-53GA • CPX-53GB
CPX-53GC • CPX-53GD
SMD CRYSTAL

Dimensions (Units: mm)

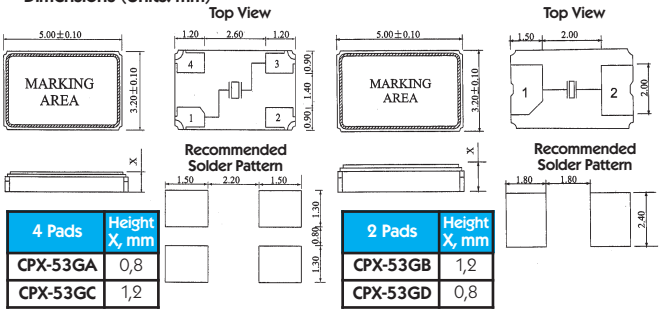

4 Pads	Height X, mm
CPX-53GA	0,8
CPX-53GC	1,2

2 Pads	Height X, mm
CPX-53GB	1,2
CPX-53GD	0,8

5.0 x 3.2 x 1.2 / 0.8

FEATURES

1. Reflow solderable.
2. CPX-53GB and CPX-53GC: low temperature glass sealed ceramic SMD package.
3. CPX-53GA and CPX-53GD: seam sealing.
4. Wide frequency range.
5. Industry standard.
6. Excellent heat- and shock resistance.

APPLICATION

Suitable for bluetooth, cordless phone, facsimile.

ELECTRICAL SPECIFICATIONS				
Model	**CPX-53GA**	**CPX-53GB**	**CPX-53GC**	**CPX-53GD**
Frequency Range	10.0 MHz ~ 80.0 MHz			
Frequency Tolerance (at +25°C)	±10 / ±30 / ±50 ppm	±30 / ±50 / ±100 ppm	±30 / ±50 / ±100 ppm	±10 / ±30 / ±50 ppm
Operating Temperature Range	-40°C to +85°C			
Frequency Stability	±10 / ±30 / ±50 ppm	±30 / ±50 / ±100 ppm	±30 / ±50 / ±100 ppm	±10 / ±30 / ±50 ppm
Equivalent Series Resistance	10.0 MHz ~ 19.999 MHz 80 Ω max 20.0 MHz ~ 29.999 MHz 70 Ω max 30.0 MHz ~ 47.999 MHz 50 Ω max 48.0 MHz ~ 80.000 MHz 70 Ω max			
Load Capacitance (C_L)	8, 10, 12, 16, 20 pF, ... etc. or Customer Specification			
Oscillation Mode	10.0 MHz ~ 47.999 MHz : Fundamental 48.0 MHz ~ 80.000 MHz: 3rd Overtone			
Storage Temperature Range	– 40°C to +85°C			
Shunt Capacitance	7 pF max.			
Insulator Resistance	500 MΩ min. at 100VDC			
Drive Level	100 µw (300 µw max.)			
Aging (at +25°C) first year	2 ppm / year max.	5 ppm / year max.	5 ppm / year max.	2 ppm / year max.

All specifications subject to change without notice.

digital electronic gmbh • Tel.: +49 (0) 8221/708-0 • Fax: +49 (0) 8221/708-80

CPX-42
SMD CRYSTAL

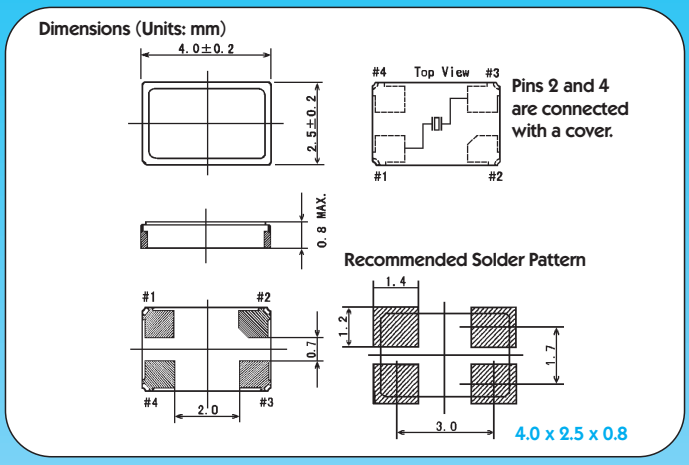

FEATURES

1. Ultra-thin and small type surface mounting quartz crystal with height only 0.8 mm.
2. A highly reliable seam welding sealing is adopted to assure high realization and reflow soldering is possible.
3. Automatic mounting is enabled by emboss taping.

APPLICATION

Cellphones, Bluetooth, Modems, Keyless-Go Systems, Automotive, etc.

ELECTRICAL SPECIFICATIONS		
Model		**CPX-42**
Frequency Range		12.0 MHz ~ 54.0 MHz
Oscillation Mode / Crystal Cut		Fundamental / AT-cut
Load Capacitance (C_L)		8, 10, 12, 16, 20 pF, ... etc. or Customer Specification
Drive Level		100 µW (300 µW max.)
Frequency Tolerance (at +25°C)		±10 ppm / ±15 ppm / ±30 ppm
Equivalent Series Resistance (ESR)	12.0 MHz ~ 19.999 MHz	80 Ω max.
	20.0 MHz ~ 25.999 MHz	70 Ω max.
	26.0 MHz ~ 54.000 MHz	50 Ω max.
Frequency Stability		±10 ppm / ±15 ppm / ±30 ppm
Operating Temperature Range		-20°C to +70°C, -40°C to +85°C option
Storage Temperature Range		-40°C to +85°C
Aging (at +25°C) first year		±2 ppm / year max.

All specifications subject to change without notice.

digital electronic gmbh • Tel.: +49 (0) 8221/708-0 • Fax: +49 (0) 8221/708-80

CPX-32 • CPX-32F
SMD CRYSTAL

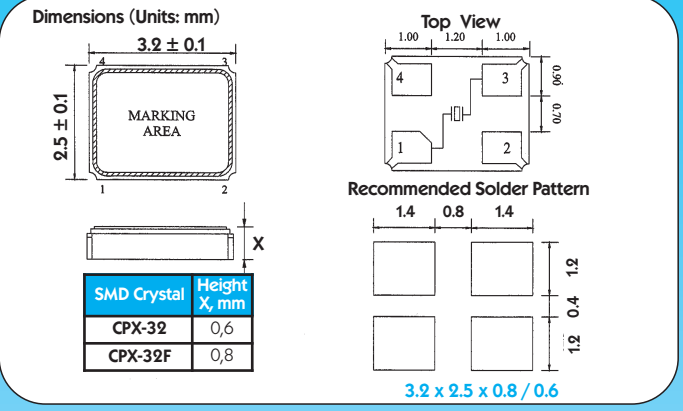

SMD Crystal	Height X, mm
CPX-32	0,6
CPX-32F	0,8

FEATURES

1. Ultra-thin and small types surface mounting quartz crystals with height 0.8 or 0.6 mm.
2. A highly reliable seam welding sealing is adopted to assure high realization and reflow soldering is possible.
3. Automatic mounting is enabled by emboss taping.

APPLICATION

Cellphones, Bluetooth, Modems, Keyless-Go Systems, Automotive, etc.

ELECTRICAL SPECIFICATIONS			
Model		**CPX-32**	**CPX-32F**
Frequency Range		12.0 MHz ~ 125.0 MHz	
Oscillation Mode / Crystal Cut		Fundamental /AT-cut / 3rd Overtone (ab 50 MHz)	
Load Capacitance (C_L)		8, 10, 12, 16, 20 pF, ... etc. or Customer Specification	
Drive Level		50 µW (100 µW max.)	
Frequency Tolerance (at +25°C)		±10 / ±15 / ±30 ppm	±30 / ±50 / ±100 ppm
Equivalent Series Resistance (ESR)	12.0 MHz ~ 19.999 MHz	80 Ω max.	
	20.0 MHz ~ 25.999 MHz	70 Ω max.	
	26.0 MHz ~ 125.00 MHz	50 Ω max.	
Frequency Stability		±10 / ±15 / ±30 ppm	±30 / ±50 / ±100 ppm
Operating Temperature Range		-20°C to +70°C, -40°C to +85°C option	
Storage Temperature Range		-40°C to +85°C	
Shunt Capacitance		3 pF max.	
Insulator Resistance		500 MΩ min. at 100VDC	
Aging (at +25°C) first year		±2 ppm / year max.	±5 ppm / year max.

All specifications subject to change without notice.

digital electronic gmbh • Tel.: +49 (0) 8221/708-0 • Fax: +49 (0) 8221/708-80

CPX-22
SMD CRYSTAL

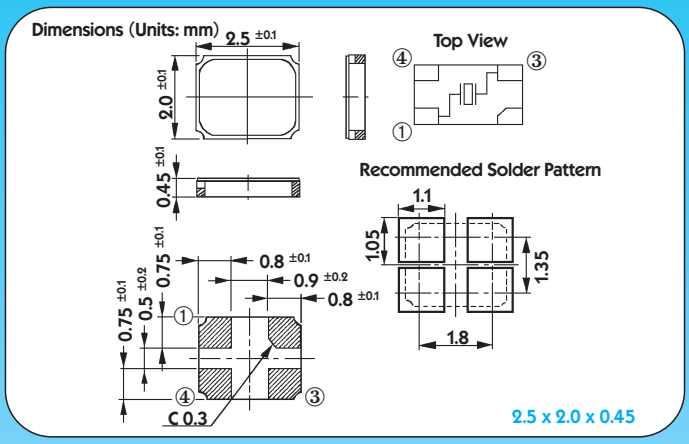

FEATURES

1. Ultra-thin and small type surface mounting quartz crystal with height only 0.45 mm.
2. A highly reliable seam welding sealing is adopted to assure high realization and reflow soldering is possible.
3. Automatic mounting is enabled by emboss taping.

APPLICATION

Cellphones, Bluetooth, Modems, Keyless-Go Systems, Automotive, etc.

ELECTRICAL SPECIFICATIONS		
Model		**CPX-22**
Frequency Range		12.0 MHz ~ 54.0 MHz
Oscillation Mode / Crystal Cut		Fundamental / AT-cut
Load Capacitance (C_L)		8, 10, 12, 16, 20 pF, ... etc. or Customer Specification
Drive Level		50 µW (100 µW max.)
Frequency Tolerance (at +25°C)		±10 ppm / ±15 ppm / ±30 ppm
Equivalent Series Resistance	12.0 MHz ~ 15.999 MHz	120 Ω max.
	16.0 MHz ~ 19.999 MHz	100 Ω max.
	20.0 MHz ~ 29.999 MHz	80 Ω max.
	30.0 MHz ~ 54.000 MHz	50 Ω max
Frequency Stability		±10 ppm / ±15 ppm / ±30 ppm
Operating Temperature Range		-20°C to +70°C, -40°C to +85°C option
Storage Temperature Range		-40°C to +85°C
Aging (at +25°C) first year		±2 ppm / year max.

All specifications subject to change without notice.

digital electronic gmbh • Tel.: +49 (0) 8221/708-0 • Fax: +49 (0) 8221/708-80

CPX-21
SMD CRYSTAL

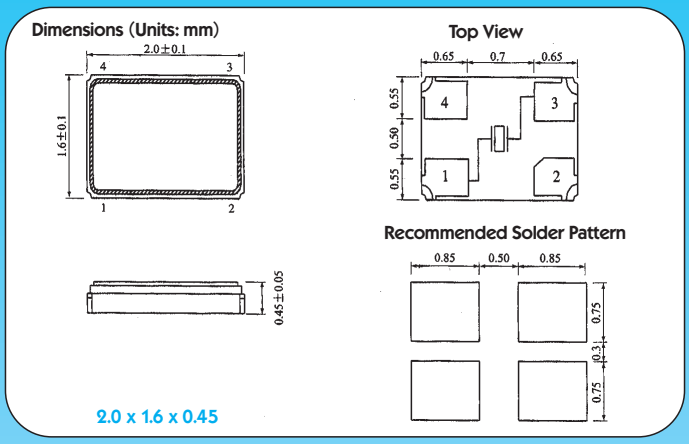

FEATURES

1. Ultra-thin and small type surface mounting quartz crystal with height only 0.45 mm.
2. A highly reliable seam welding sealing is adopted to assure high realization and reflow soldering is possible.
3. Automatic mounting is enabled by emboss taping.

APPLICATION

Cellphones, Bluetooth, etc.

ELECTRICAL SPECIFICATIONS		
Model		**CPX-21**
Frequency Range		24.0 MHz ~ 54.0 MHz
Oscillation Mode		Fundamental
Shunt Capacitance		3 pF max.
Load Capacitance (CL)		8, 10, 12, 16, 20 pF, ... etc. or Customer Specification
Drive Level		50 µW (100 µW max.)
Frequency Tolerance (at +25°C)		±10 ppm / ±15 ppm / ±30 ppm
Equivalent Series Resistance	24.0 MHz ~ 24.999 MHz 25.0 MHz ~ 35.999 MHz 36.0 MHz ~ 54.000 MHz	100 Ω max. 80 Ω max. 60 Ω max.
Insulator Resistance (Custom Specified)		500 MΩ min. at 100VDC
Temperature Stability (at +25°C)		±10 ppm / ±15 ppm / ±30 ppm
Operating Temperature Range		-20°C to +70°C, -40°C to +85°C option
Storage Temperature Range		-40°C to +85°C
Aging (at +25°C) first year		±2 ppm / year max.

CPX-11
SMD CRYSTAL

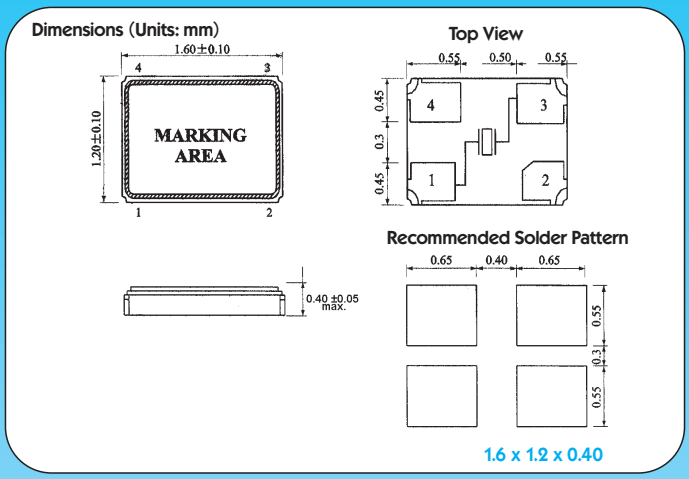

FEATURES

1. Ultra-thin and small type surface mounting quartz crystal.
2. A highly reliable seam welding sealing is adopted to assure high realization and reflow soldering is possible.
3. Automatic mounting is enabled by emboss taping.

APPLICATION

Cellphones, Bluetooth, Wireless LAN, etc.

ELECTRICAL SPECIFICATIONS		
Model		**CPX-11**
Frequency Range		26.0 MHz ~ 54.0 MHz
Oscillation Mode		Fundamental
Shunt Capacitance		3 pF
Load Capacitance (CL)		8, 10, 12, 16, 20 pF, ...etc. or Customer Specification
Drive Level		50 µW (100 µW max.)
Frequency Tolerance (at +25°C)		±10 ppm / ±30 ppm / ±50 ppm
Equivalent Series Resistance	26.0 MHz ~ 29.999 MHz 30.0 MHz ~ 54.000 MHz	150 Ω max. 100 Ω max.
Insulator Resistance (Custom Specified)		500 MΩ min. at 100VDC
Temperature Stability (at +25°C)		±10 ppm / ±30 ppm / ±50 ppm
Operating Temperature Range		-20°C to +70°C, -40°C to +85°C option
Storage Temperature Range		-40°C to +85°C
Aging (at +25°C) first year		±2 ppm / year max.

All specifications subject to change without notice.

digital electronic gmbh • Tel.: +49 (0) 8221/708-0 • Fax: +49 (0) 8221/708-80

TC-38 • TC-26 • TC-15
TUNING FORK (UHRENQUARZ)

Dimensions (Units: mm)

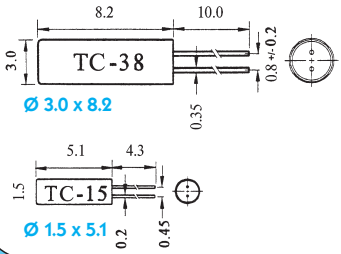

3 Gehäuseversionen

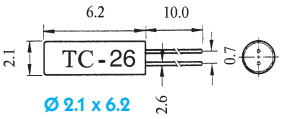

Temperature Characteristics X-cut

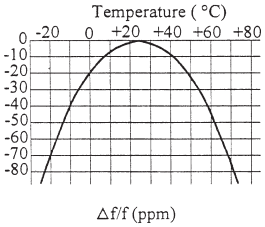

Load Capacitance Characteristics

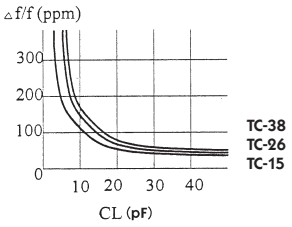

FEATURES

1. Because of their excellent shock resistance and low power consumption, the units are ideal for portable equipment.
2. Cylinder type metal package / holder.

APPLICATION

Used as a clock source for communication equipment, AV equipment, OA equipment, measuring instruments and various types of clocks.

ELECTRICAL SPECIFICATIONS	
Model	**TC-38 • TC-26 • TC-15**
Frequency	32.768 kHz
Frequency Tolerance (at +25°C)	±5 ppm / ±10 ppm / ±20 ppm
Turn Over Temperature	at +25°C ±5°C
Frequency Coefficient	– 0.034 ppm / °C² max. typical
Operating Temperature Range	–10°C to +60°C, -40°C to +85°C option
Load Capacitance (C_L)	10 pF, 12.5 pF, etc. (Customer Spec.)
Storage Temperature Range	–20°C to +70°C
Shunt Capacitance	0.85 pF typical, 2 pF max.
Motional Capacitance	2 fF typical
Equivalent Series Resistance	50 kΩ max.
Insulation Resistance	500 MΩ min. at 100 V_{DC}
Drive Level	1 µW max.
Aging (at +25°C) first year	±5 ppm / year max.

All specifications subject to change without notice.

digital electronic gmbh • Tel.: +49 (0) 8221/708-0 • Fax: +49 (0) 8221/708-80

MM-25S
SMD CRYSTAL LOW FREQUENCY

Tuning Fork Crystal

Dimensions (Units: mm)

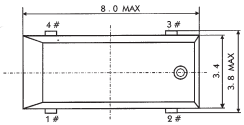

Internal Connection

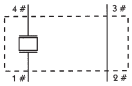

Do not connect #2 and #3 to external device.

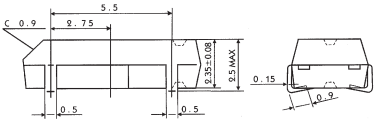

Recommended Solder Pattern

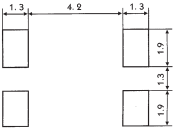

8.0 x 3.8 x 2.5

FEATURES

1. Plastic package.
2. Embeded with heat resistant cylinder type crystal bring highly stable characteristics.
3. Automatic mounting and reflowable type.

Parabolic Temperature Curve

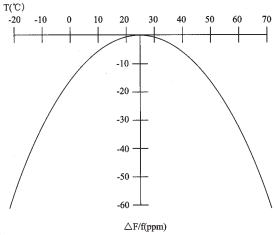

ELECTRICAL SPECIFICATIONS	
Model	**MM-25S**
Nominal Frequency	30.0 kHz ~ 100.0 kHz
Frequency Tolerance (at +25°C)	±20 ppm / ±30 ppm / ±50 ppm
Turnover Temperature	+25°C ±5°C
Temperature Coefficient	– 0.034 ppm/ °C^2 typical
Operating Temperature Range	– 10°C to +60°C, – 40°C to +85°C option
Storage Temperature Range	– 55°C to +125°C
Load Capacitance (C_L)	12.5 pF typical (Customer Spec.)
Motional (Series) Resistance	50 kΩ max.
Shunt Capacitance	0.8 ~ 1.7 pF typical
Drive Level	1 μW max.
Aging (at +25°C) first year	±5 ppm / year max.

MM-20SS
SMD CRYSTAL (UHRENQUARZ)

Tuning Fork Crystal

Dimensions (Units: mm)

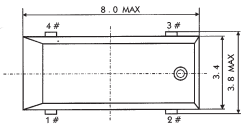

Internal Connection

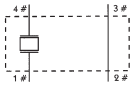

Do not connect #2 and #3 to external device.

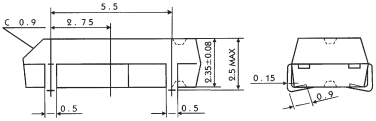

Recommended Solder Pattern

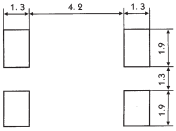

8.0 x 3.8 x 2.5

FEATURES

1. Plastic package.
2. Embeded with heat resistant cylinder type crystal bring highly stable characteristics.
3. Automatic mounting and reflowable type.

Parabolic Temperature Curve

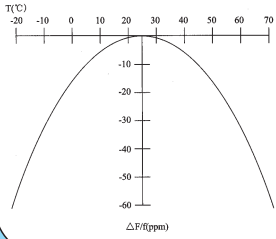

APPLICATION

For clock source for portable and automotive equipment with low power consumption.

ELECTRICAL SPECIFICATIONS	
Model	**MM-20SS**
Frequency	32.768 kHz
Frequency Tolerance (at +25°C)	±10 ppm / ±20 ppm
Turnover Temperature	+25°C ±5°C
Temperature Coefficient	– 0.034 ±0.006 ppm/ $°C^2$ typical
Motional (Series) Resistance	50 kΩ max.
Load Capacitance (C_L)	12.5 pF typical (Customer Spec.)
Shunt Capacitance	1.35 pF typical
Drive Level	1 μW max.
Operating Temperature Range	– 10°C to +60°C, -40°C to +85°C option
Storage Temperature Range	– 55°C to +125°C
Aging (at +25°C) first year	±3 ppm / year max.

CROSS REFERENCES:

- **MC-306 EPSON**
- **CM-200S CITIZEN**
- **CM-200C CITIZEN**

MM-11B
SMD CRYSTAL (UHRENQUARZ)

Tuning Fork Crystal

Dimensions (Units: mm)

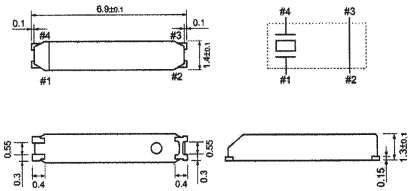

Recommended Solder Pattern

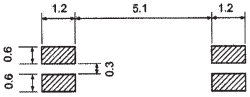

Do not connect #2 and #3 to external device

6.9 x 1.4 x 1.3

FEATURES

1. Ultra-miniature type of SMD.
2. Highly stable characteristics – high enough to permit reflow soldering.
3. Can be mounted automatically.
4. Low consumption makes it ideal for application to portable equipment.
5. Plastic package.

Parabolic Temperature Curve

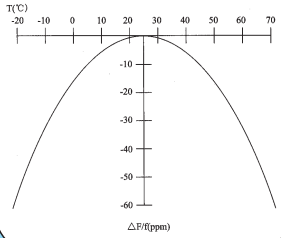

ELECTRICAL SPECIFICATIONS	
Model	**MM-11B**
Nominal Frequency	32.768 kHz
Frequency Tolerance (at +25°C)	±20 ppm
Frequency vs Temperature	See drawing
Turnover Temperature	+25°C ±5°C
Temperature Coefficient	-0.034 ± 0.006 ppm/°C² typical
Operating Temperature Range	– 40°C to +85°C
Storage Temperature Range	– 55°C to +125°C
Equivalent Series Resistance	65 kΩ max.
Load Capacitance (C_L)	12.5 pF typical
Motional Capacitance	0.0023 pF typical
Shunt Capacitance	1.2 pF max.
Drive Level	1 µW max.
Insulation Resistance	500 MΩ min. at 100 V_{DC} ± 15 V
Aging (at +25°C) first year	±3 ppm / year max.
Sealing	1 x 10^{-2} µ Pa • m³/s max.

CROSS REFERENCES:

- **MC-146 EPSON**
- **CM-130 CITIZEN**

All specifications subject to change without notice.

digital electronic gmbh • Tel.: +49 (0) 8221/708-0 • Fax: +49 (0) 8221/708-80

TSM-250 • TC-26
CRYSTAL (FUNKUHRQUARZ)

Tuning Fork Crystal

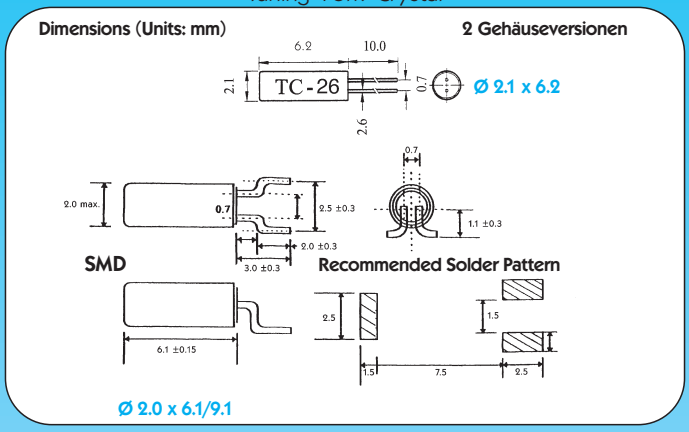

FEATURES

1. Different versions of metal packages / holders available.
2. Through hole: cylinder type.
3. SMD: cylinder type with lead-bent gull wing.

ELECTRICAL SPECIFICATIONS	
Model	**TSM-250 • TC-26**
Frequency	30.0 kHz ~ 100.0 kHz
Frequency Tolerance (at +25°C)	±10 ppm / ±20 ppm / ±100 ppm
Turnover Temperature	+25°C ±5°C
Temperature Coefficient	– 0.042 ppm/ °C^2 typical
Operating Temperature Range	– 10°C to +60°C, -40°C to +85°C option
Equivalent Series Resistance	35 kΩ ~ 50 kΩ
Load Capacitance (C_L)	12.5 pF typical
Shunt Capacitance	0.85 pF typical
Drive Level	1 µW max.
Insulation Resistance	500 MΩ min. at 100 V_{DC} ± 5 V
Aging (at +25°C) first year	±5 ppm / year max.

TSM-26B
SMD CRYSTAL (UHRENQUARZ)

Tuning Fork Crystal

Dimensions (Units: mm)

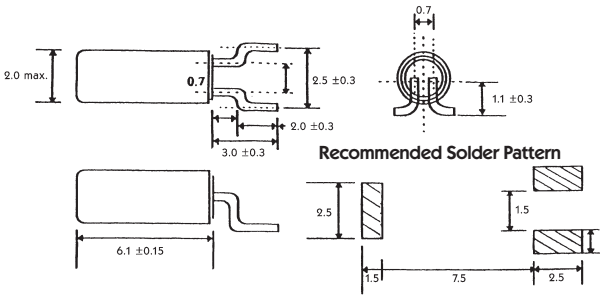

Ø 2.0 x 6.1/9.1

FEATURES

1. Ultra-miniature type of SMD. Cylinder type metal package/ holder with lead-bent gull wing.
2. Highly stable characteristics – high enough to permit reflow soldering.
3. Can be mounted automatically.
4. Low consumption makes it ideal for application to portable equipment.

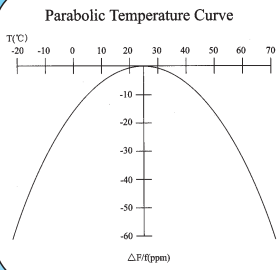

ELECTRICAL SPECIFICATIONS	
Model	**TSM-26B**
Nominal Frequency	32.768 kHz
Frequency Tolerance (at +25°C)	±10 ppm / ±20 ppm / ±30 ppm
Turnover Temperature	+25°C ±5°C
Temperature Coefficient	– 0.034 ppm/ °C² typical
Operating Temperature Range	– 10°C to + 60°C, – 40°C to +85°C option
Equivalent Series Resistance	35 kΩ max.
Load Capacitance (C_L)	12.5 pF typical
Shunt Capacitance	1.2 pF typical
Drive Level	1 µW max.
Insulation Resistance	500 MΩ at 100 V_{DC} ± 5 V
Aging (at +25°C) first year	±3 ppm / year max.

CROSS REFERENCES:

- **CMR-200T CITIZEN**

All specifications subject to change without notice.

digital electronic gmbh • Tel.: +49 (0) 8221/708-0 • Fax: +49 (0) 8221/708-80

TSM-26BJ
SMD CRYSTAL (UHRENQUARZ)

Low Frequency Tuning Fork Crystal

Dimensions (Units: mm)

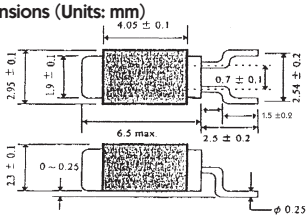

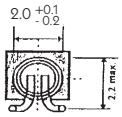

Recommended Solder Pattern

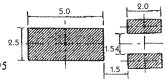

Reflow Condition

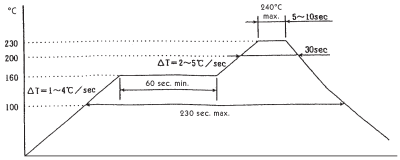

2.95 x 2.3 x 6.5/9.0

FEATURES

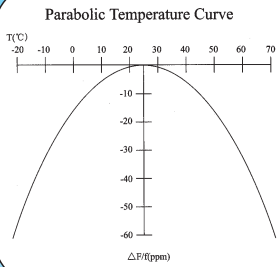

1. Ultra-miniature type of SMD. Cylinder type metal package/ holder with lead-bent gull wing and plastic jacket.
2. Highly stable characteristics – high enough to permit reflow soldering.
3. Can be mounted automatically.
4. Low consumption makes it ideal for application to portable equipment.
5. Flat Surface enables easy and safe handling with automatic insertion machines.

ELECTRICAL SPECIFICATIONS	
Model	**TSM-26BJ**
Frequency	32.768 kHz, 100.000 kHz
Frequency Tolerance (at +25°C)	±20 ppm / ±30 ppm
Turnover Temperature	+25 °C ±5°C
Temperature Coefficient	– 0.034 ppm/ °C^2 typical
Operating Temperature Range	– 10°C to + 60°C, – 40°C to +85°C option
Equivalent Series Resistance	35 kΩ max.
Load Capacitance (C_L)	12.5 pF typical
Shunt Capacitance	1.6 pF typical
Drive Level	1 µW max.
Insulation Resistance	500 MΩ at 100 V_{DC} ± 5 V
Aging (at +25°C) first year	±3 ppm / year max.

All specifications subject to change without notice.

digital electronic gmbh • Tel.: +49 (0) 8221/708-0 • Fax: +49 (0) 8221/708-80

CMJ-206
SMD CRYSTAL (UHRENQUARZ)

Tuning Fork Crystal

Dimensions (Units: mm)

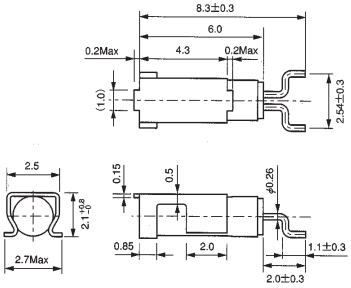

Recommended Solder Pattern

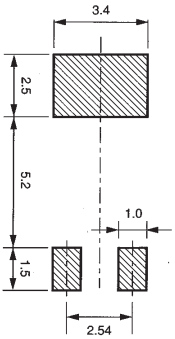

6.0/8.3 x 2.5 x 2.1

FEATURES

1. Metal jacket makes crystal superior for automatic mounting and reflow soldering.
2. Cylinder type metal package / holder with lead-bent gull wing and metal jacket.

APPLICATION

Its low power consumption makes it ideal for application in portable equipments.

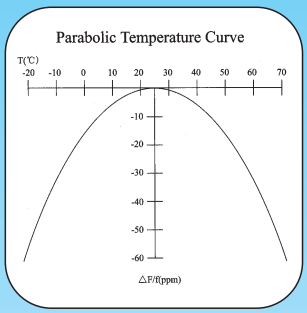

ELECTRICAL SPECIFICATIONS	
Model	**CMJ-206**
Nominal Frequency	32.768 kHz
Frequency Tolerance (at +25°C)	±20 ppm
Load Capacitance (C_L)	12.5 pF typical
Temperature Coefficient	-0.034±0.006 ppm/°C² typical
Equivalent Series Resistance (at +25°C)	50 kΩ max.
Drive Level	1 µW max.
Operating Temperature Range	-40°C to +85°C
Storage Temperature Range	-55°C to +125°C
Turnover Temperature	+25°C ±5°C
Aging (at +25°C) first year	±3 ppm / year max.
Shunt Capacitance	1.35 pF typical
Q-Factor	70000 typical

All specifications subject to change without notice.

digital electronic gmbh • Tel.: +49 (0) 8221/708-0 • Fax: +49 (0) 8221/708-80

CM-519
SMD CRYSTAL (UHRENQUARZ)

Tuning Fork Crystal

Dimensions (Units: mm)

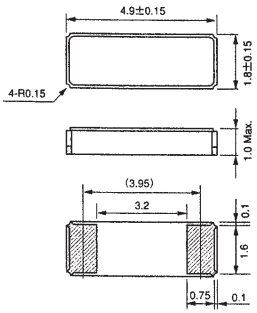

Recommended Solder Pattern

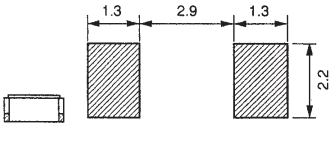

4.9 x 1.8 x 1.0

FEATURES

1. Ceramic package of tuning fork crystal units.
2. Ultra miniature and thin type. Best for high density circuit boards.

APPLICATION

Its low power consumption makes it ideal for application in portable equipments.
Perfect for Pb-free products.

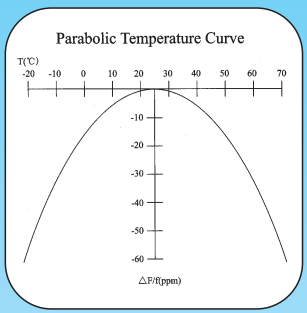

ELECTRICAL SPECIFICATIONS	
Model	**CM-519**
Nominal Frequency	32.768 kHz
Frequency Tolerance (at +25°C)	±20 ppm
Load Capacitance (C_L)	9.0 pF, 12.5 pF typical
Temperature Coefficient	-0.034±0.006 ppm/°C² typical
Equivalent Series Resistance (at +25°C)	70 kΩ max.
Drive Level	1 µW max.
Operating Temperature Range	-40°C to +85°C
Storage Temperature Range	-55°C to +125°C
Turnover Temperature	+25°C ±5°C
Aging (at +25°C) first year	±3 ppm / year max.
Shunt Capacitance	1.35 pF typical
Q-Factor	57000 typical

CM-415
SMD CRYSTAL (UHRENQUARZ)

Tuning Fork Crystal

Dimensions (Units: mm)

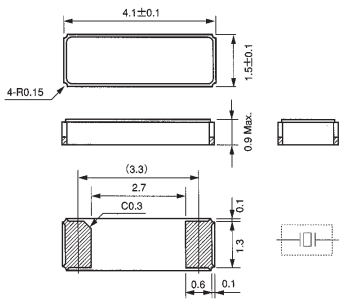

Recommended Solder Pattern

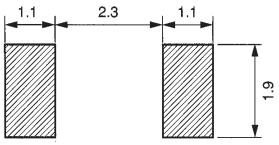

4.1 x 1.5 x 0.9

FEATURES

1. Ceramic package of tuning fork crystal units.
2. Ultra miniature and thin type. Best for high density circuit boards.

APPLICATION

Its low power consumption makes it ideal for application in portable equipments. Perfect for Pb-free products.

Parabolic Temperature Curve

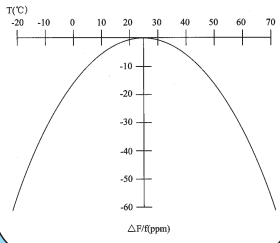

ELECTRICAL SPECIFICATIONS	
Model	**CM-415**
Nominal Frequency	32.768 kHz
Frequency Tolerance (at +25°C)	±20 ppm
Load Capacitance (C_L)	9.0 pF, 12.5 pF typical
Temperature Coefficient	-0.034±0.006 ppm/°C² typical
Equivalent Series Resistance (at +25°C)	70 kΩ max.
Drive Level	1 µW max.
Operating Temperature Range	-40°C to +85°C
Storage Temperature Range	-55°C to +125°C
Turnover Temperature	+25°C ±5°C
Aging (at +25°C) first year	±3 ppm max.
Shunt Capacitance	1.10 pF typical
Q-Factor	53000 typical

CM-315
SMD CRYSTAL (UHRENQUARZ)

Tuning Fork Crystal

Dimensions (Units: mm)

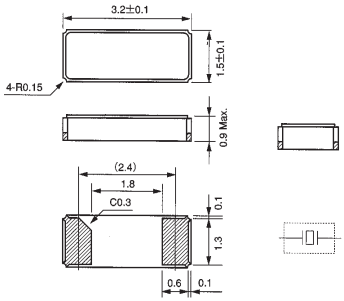

Recommended Solder Pattern

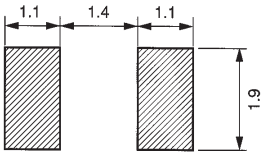

3.2 x 1.5 x 0.9

FEATURES

1. Ceramic package of tuning fork crystal units.
2. Ultra miniature and thin type. Best for high density circuit boards.

APPLICATION

Its low power consumption makes it ideal for application in portable equipments. Perfect for Pb-free products.

Parabolic Temperature Curve

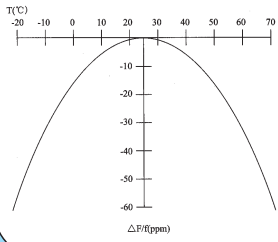

ELECTRICAL SPECIFICATIONS	
Model	**CM-315**
Nominal Frequency	32.768 kHz
Frequency Tolerance (at +25°C)	±20 ppm
Load Capacitance (C_L)	9.0 pF, 12.5 pF typical
Temperature Coefficient	-0.034±0.006 ppm/°C^2 typical
Equivalent Series Resistance (at +25°C)	70 kΩ max.
Drive Level	1 µW max.
Operating Temperature Range	-40°C to +85°C
Storage Temperature Range	-55°C to +125°C
Turnover Temperature	+25°C ±5°C
Aging (at +25°C) first year	±3 ppm max.
Shunt Capacitance	0.95 pF typical
Q-Factor	30000 typical

digital electronic gmbh • Tel.: +49 (0) 8221/708-0 • Fax: +49 (0) 8221/708-80

CM-212
SMD CRYSTAL (UHRENQUARZ)

Tuning Fork Crystal

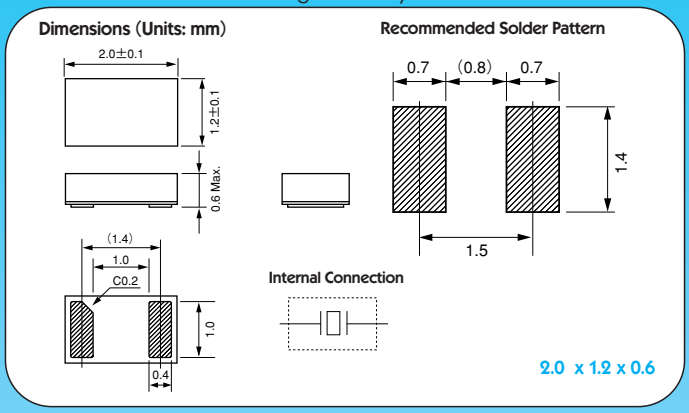

FEATURES

1. Tuning fork crystal with in-house ceramic.
2. High density SMD type.
3. Ultra-Light weight with ultra-miniature packaging.
4. High-stability assured with tight vacuum sealing.

APPLICATION

Most appropriate for application in portable equipments and mobile telecommunications devices.

ELECTRICAL SPECIFICATIONS	
Model	**CM-212**
Nominal Frequency	32.768 kHz
Frequency Tolerance (at +25°C)	±20 ppm
Load Capacitance (C_L)	12.5 pF typical
Temperature Coefficient	-0.04 ppm/°C^2 max.
Equivalent Series Resistance (at +25°C)	90 kΩ max.
Drive Level	0.5 µW max.
Operating Temperature Range	-40°C to +85°C
Storage Temperature Range	-55°C to +125°C
Turnover Temperature	+25°C ±5°C
Aging (at +25°C ±3°C) first year	±3 ppm max.
Shunt Capacitance	1.7 pF typical

DIL-14 • DIL-8
OSCILLATOR HXO SERIES

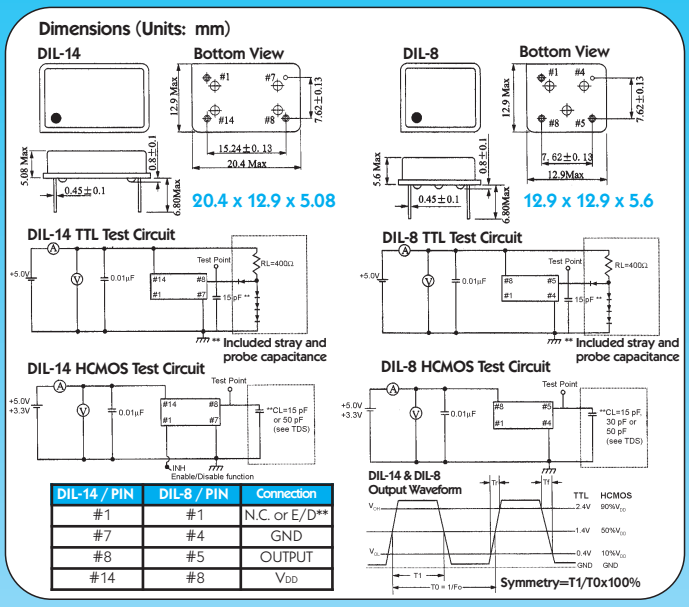

DIL-14 / PIN	DIL-8 / PIN	Connection
#1	#1	N.C. or E/D**
#7	#4	GND
#8	#5	OUTPUT
#14	#8	V_{DD}

- Full metal resistance welded package and pin 7 case ground minimize the RF radiation and EMI.
- Standard full size and half size 4 pin DIP package. Glass stand-offs at bottom for proper defluxing.
- TTL/CMOS output. Choice of ±25 ppm, ±50 ppm and ±100 ppm inclusive frequency stability.

ELECTRICAL SPECIFICATIONS $T_A = 25\,°C$	
Model	**DIL-14 • DIL-8**
Frequency Range	0.1 MHz ~150.0 MHz
Input Voltage	5 V ±10%, 3.3 V ±10%
Package Designator	HXO-14: Full size 4 pin DIP package (DIL-14) HXO-8: Half size 4 pin DIP package (DIL-8)
Frequency Stability Designator*	„A“: ±25 ppm (±0.0025%) „B“: ±50 ppm (±0.005%) „C“: ±100 ppm (±0.01%) default and standard
Output Load	15 pF (default)/ 50 pF or 10 TTL Gates
Input Current	3 – 80 mA, frequency dependent
Logic „1“ Level	90% V_{DD} min.
Logic „0“ Level	10% V_{DD} max.
Symmetry (Duty Cycle)	50% ± 10% max. at 0.5 V_{DD} default and standard 50% ± 5% max. at 0.5 V_{DD} option
Rise and Fall time	4 ns max. at 20% ~ 80% V_{DD}
Operating Temperature	0°C to +70°C, -40°C to +85°C option
Disable Phase Delay	100 ns max.
Storage Temperature	–50°C to +125°C

OPTIONS: *Include: +25°C tolerance, operating temperature range, ±10% input voltage variation, load change, aging, shock and vibration. **When „0“ (≤ 0.8 V) is applied to the pin 1 the output becomes high impedance. The output becomes active when „0“ level is removed. **N.C. - no connection; E/D - enable/disable.

All specifications subject to change without notice.

digital electronic gmbh • Tel.: +49 (0) 8221/708-0 • Fax: +49 (0) 8221/708-80

DIL-14TSW • DIL-8TSW
TRUE SINE WAVE CLOCK OSCILLATOR

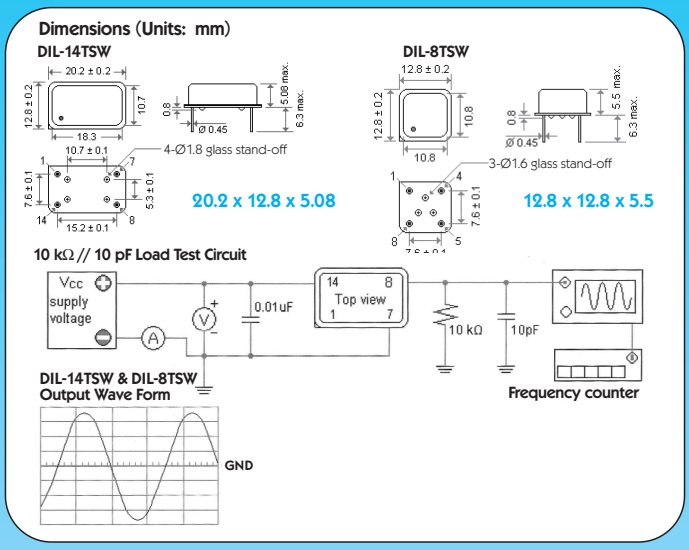

FEATURES

1. True sine wave clock oscillator. with size of 20.2 x 12.8 x 5.08 mm & 12.8 x 12.8 x 5.5 mm.
2. Supply Voltage 2.8 V, 3.3 V or 5.0 V

Terminal DIL-14 TSW	Terminal DIL-8 TSW	Connection
#1**	#1**	N.C.
#7	#4	GND
#8	#5	OUTPUT
#14	#8	V_{DD}

ELECTRICAL SPECIFICATIONS		
Model	**Condition**	**DIL-14TSW / DIL-8TSW**
Frequency Range		10.0 MHz ~30.0 MHz
Frequency Tolerance	at +25°C	±25 ppm / ±50 ppm / ±100 ppm max.
Frequency Stability	-10°C to +70°C -40°C to +85°C	enter the desired stability after the code „C" enter the desired stability after the code „I" *
Operating Temperature Range		-10°C to +70°C commercial -40°C to +85°C industrial
Storage Temperature Range		-55°C to +125°C
Power Supply Voltage		2.8 V_{DC} ±5% / +3.3 V_{DC} ±5% / +5.0 V_{DC} ±10%;
Current Consumption at 15 pF Load		1.0 mA max. / 1.5 mA max. / 1.2 mA max.
Start Time		2.0 ms typical
Load		10 kΩ // 10 pF load
Output Level		1.0 V_{p-p} typical
Harmonics		< -25dBc (frequency dependent) ***
Aging	at +25°C	±5 ppm / year max.

GENERAL SPECIFICATION: at Ta=25°C, CL=15pF

* for example: „C20" for ±20 ppm over commercial temperature range;
„I30" for ±30 ppm over industrial temperature range.

** No Enable/Disable (Tr-State) option. // *** Sub-Harmonics: none.

All specifications subject to change without notice.

digital electronic gmbh • Tel.: +49 (0) 8221/708-0 • Fax: +49 (0) 8221/708-80

SMD-1100S
SMD OSCILLATOR

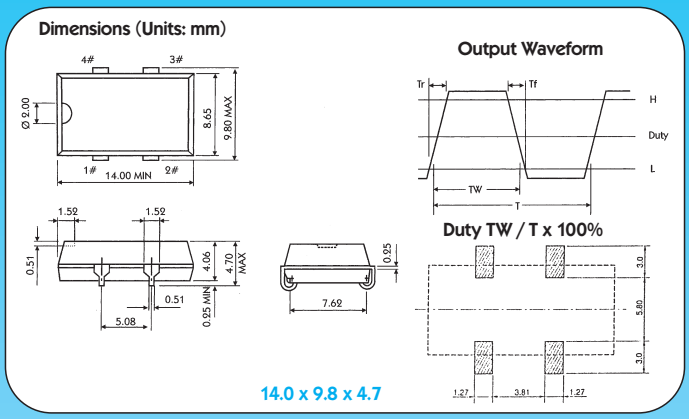

FEATURES

1. J-Lead plastic surface mount.
2. Wide frequency range.
3. Low cost.
4. Tri-State enable / disable.
5. SG-615 / CMX-309 / SCO-20 compatible.

Terminal	Connection
#1	O.E.
#2	GND
#3	OUTPUT
#4	V_{DD}

ELECTRICAL SPECIFICATIONS				
Model		**Condition**	**SMD-1100S (5.0V)**	**SMD-1100S (3.3V)**
Frequency Range			1.0 MHz ~ 125.0 MHz	1.0 MHz ~ 106.250 MHz
Frequency Stability			±25 ppm / ±50 ppm / ±100 ppm max.	
Operating Temperature Range			0°C to +70°C, -40°C to +85°C option	
Storage Temperature Range			-55°C to +125°C	
Supply Voltage			5.0 V±10%	3.3 V±10%
Supply Current		1.0 MHz ~ 20.0 MHz 20.001 MHz ~ 40.0 MHz 40.001 MHz ~ 80.0 MHz 80.001 MHz ~ 125.0 MHz	20 mA max. 30 mA max. 40 mA max. 50 mA max.	15 mA max. 25 mA max. 35 mA max. 45 mA max.
Load Drive Capability			10 TTL Load or 15 pF HCMOS Load	
Rise Time		10% V_{DD} ~ 90% V_{DD}	4 ns max.	
Fall Time		90% V_{DD} ~ 10% V_{DD}	4 ns max.	
Output Voltage	V_{OH} V_{OL}	w/TTL Load w/HCMOS Load	2.4 V_{DC} min., 90% V_{DD} min. 0.4 V_{DC} max., 10% V_{DD} max.	
Duty Cycle		at 50% Waveform w/HCMOS Load or 1.4 V_{DC} w/TTL Load	50 ±10%, 50 ±5% option	
Pin 1, Tri-State Input Voltage		V_{IH}: ≥ 2.0 V_{DC} V_{IL}: ≤ 0.8 V_{DC}	enable output disable output: high impedance	
Start Time			10 ms max.	
Period Jitter: pk-pk			100 ps max.	
Period Jitter: one sigma			25 ps max.	
Aging (at +25°C) first year		at +25°C ±3°C	±5 ppm / year max.	

CROSS REFERENCES:

- SG-615 EPSON
- CMX-309 CITIZEN

All specifications subject to change without notice.

digital electronic gmbh • Tel.: +49 (0) 8221/708-0 • Fax: +49 (0) 8221/708-80

SCO-700
SMD OSCILLATOR SERIES

Dimensions (Units: mm)

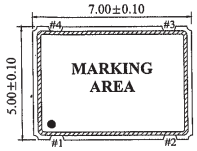

Top View

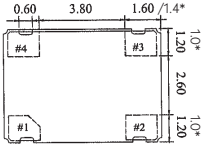

Recommended Solder Pattern

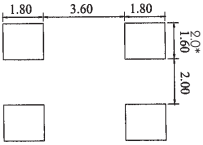

7.0 x 5.0 x 1.5
7.0 x 5.0 x 1.4 (*SCO-710)

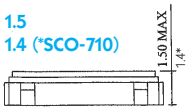

ELECTRICAL SPECIFICATIONS

Model	Condition	SCO-755	SCO-735
Frequency Range		1.0 MHz ~ 100.0 MHz	1.0 MHz ~133.0 MHz
Frequency Stability	All Condition*	±25 ppm / ±50 ppm / ±100 ppm	
Operating Temperature Range		-20°C to +70°C, -40°C to +85°C option	
Storage Temp. Range		-55°C to +125°C	
Supply Voltage		5.0 V ±10%	3.3 V ±10%
Supply Current	1.0 ~ 9.99 MHz 10.0 ~ 34.99 MHz 35.0 ~ 49.99 MHz 50.0 ~ 133.0 MHz	15 mA max. 20 mA max. 35 mA max. 40 mA max.	8 mA max. 10 mA max. 25 mA max. 35 mA max.
Output Symmentry	at 1/2 V_{DD}	45~55%	40~60%
Rise Time	10% V_{DD} ~ 90% V_{DD}	6 ns max.	
Fall Time	90% V_{DD} ~ 10% V_{DD}		
Output Voltage	V_{OH} V_{OL}	90% V_{DD} min. 10% V_{DD} max.	
Output Load	HCMOS Load	15 pF typical (30 pF , 50 pF available)	
Start Time		10 ms max. (typical)	
Stand-by Function		Yes	
Pin 1, Tri-State Function		pin 1= H or open ... Output active at pin 3 pin1= L ... high impedance at pin 3 is not active	
Aging first year	at +25°C ±3°C	±2 ppm / year max.	

OPTIONS: * Include: 25°C tolerance, operating temperature range, input voltage change, aging, load change, shock and vibration. ** 50% ± 5% is also available.

All specifications subject to change without notice.

digital electronic gmbh • Tel.: +49 (0) 8221/708-0 • Fax: +49 (0) 8221/708-80

SCO-700
SMD OSCILLATOR SERIES

FEATURES

1. Ultra miniature package clock oscillator with size of 7.0 x 5.0 x 1.5 mm. SCO-710: 7.0 x 5.0 x 1.4 mm
2. Tri-State enable/disable (E/D).
3. TTL/HCMOS compatible.
4. IR Re-flow.
5. Tape and Reel.
6. Supply Voltage: 5.0 V, 3.3 V, 2.5 V, 1.8 V and 1.0 V option.

APPLICATION

PC, Telecommunication devices amd equipment.

Terminal	Connection
#1	E/D
#2	GND
#3	OUTPUT
#4	V_{DD}

ELECTRICAL SPECIFICATIONS

SCO-736	SCO-745	SCO-725	SCO-726	SCO-718	SCO-716	SCO-710
1.0 MHz ~ 133.0 MHz						312 kHz ~ 60.0 MHz
±25 ppm / ±50 ppm / ±100 ppm						
-20°C to +70°C, -40°C to +85°C option						-10°C to +70°C, -40°C to +85°C option
-55°C to +125°C						-50°C to +100°C
3.3 V ±10%		2.5 V ±10%		1.8 V ±10%		1.0 V ±5%
8 mA max. 10 mA max. 25 mA max. 35 mA max.		7 mA max. 8 mA max. 20 mA max. 30 mA max.		6 mA max. 7 mA max. 15 mA max. 25 mA max.		6 mA max. (312 kHz~30 MHz) 10 mA max. (30~60MHz)
45~55%	40~60%	40~60%	45~55%	40~60%	45~55%	50% ±10%**
6 ns max.		7 ns max.		8 ns max.		6 ns max.
90% V_{DD} min. 10% V_{DD} max.						
15 pF typical (30 pF , 50 pF available)						
10 ms max. (typical)						
Yes						---
pin 1= H or open ... Output active at pin 3 pin1= L ... high impedance at pin 3 is not active						
±2 ppm / year max.						±3 ppm / year max.

All specifications subject to change without notice.

digital electronic gmbh • Tel.: +49 (0) 8221/708-0 • Fax: +49 (0) 8221/708-80

SCO-735/LV-PECL • SCO-735/LVDS
SCO-735/HCSL • SMD OSCILLATOR

Low Voltage Positive Emitter Coupled Logic Differential Output

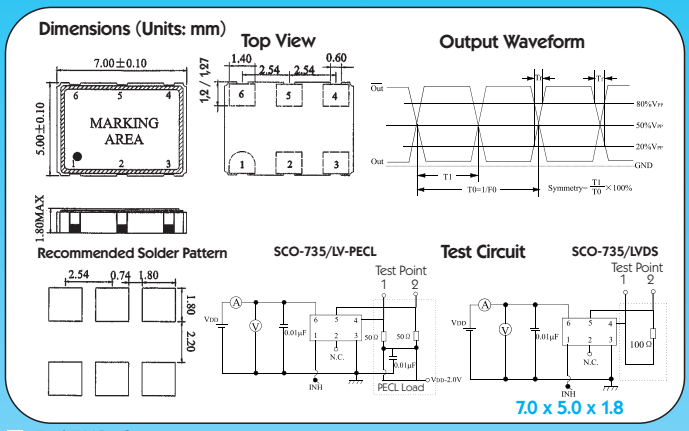

FEATURES

1. Ultra miniature package clock oscillator with size of 7.0 x 5.0 x 1.8 mm.
2. Tri-State enable / disable.
3. Low jitter and noise.
4. Differential output (LV-PECL, LVDS, HCSL).

Terminal	LV-PECL/LVDS	HCSL
#1	Enable/Disable	
#2	N.C.	
#3	GND	
#4	Complementary Output	OUTPUT
#5	OUTPUT	Complementary OUTPUT
#6	V_{DD}	

APPLICATION

SONET, SDH, Gb Ethernet.

ELECTRICAL SPECIFICATIONS			
Model	**SCO-735/LV-PECL**	**SCO-735/LVDS**	**SCO-735/HCSL**
Frequency Range	13.5 MHz ~ 200.0 MHz		
Frequency Stability	±25 ppm / ±50 ppm / ±100 ppm (All Conditions*)		
Operating Temperature Range	-20°C to +70°C, -40°C to +85°C option		-10°C to +70°C, -40°C to +85°C option
Storage Temperature Range	-55°C to +125°C		-55°C to +150°C
Supply Voltage	3.3 V ±5%		
Current Consumption, at 15pF	50 mA max.	80 mA max.	30 mA max (160.1~200 MHz)
Output Specification	LV-PECL	LVDS	HCSL
Output Load	50 Ω to V_{DD} -2.0 V	100 Ω (complementary)	50 Ω**
Output Voltage „0" V_{OL}	V_{DD} 1.620 V max.	1.1 V typical	-150min./0 typ./150 mV max
Output Voltage „1" V_{OH}	V_{DD} 1.025 V min.	1.4 V typical	660min./740 typ/850mV max
Rise Time	1 ns max. at 20% V_{PP} ~ 80% V_{PP}		0.15 ns typical
Fall Time	1 ns max. at 80% V_{PP} ~ 20% V_{PP}		0.4 ns max.
Output Symmetry	45% ~ 60% at 1.25 V, 45% ~ 55% option		50% ±5%
Differential Output Voltage	---	350 mV typical	---
Differential Output Error	---	50 mV max.	---
Offset Voltage	---	1.25 V typical	---
Offset Error	---	3m V typical	---
Intergrated Phase Jitter (RMS) at 12kHz~20MHz	0.5 ps max.		0.2 ps typical, for 155.520 MHz (ref.)
Start Time	10 ms max.		5 ms typical, 10 ms max.
Pin1, Tri-State Function	Pin 1= H or open ... Output active at Pin 4, 5 Pin1= L ... high impedance at Pin 4, 5 is not active		
Aging (at +25°C) first year	±2 ppm / year max.		±3 ppm / year max.

OPTIONS: 0.01 uF bypass capacitor should be placed between V_{DD} (pin 6) and GND (pin 3) to minimize power supply line noise. * Include: 25°C tolerance, operating temperature range, input voltage change, aging, load change, shock and vibration. ** to ground on each output.

All specifications subject to change without notice.

digital electronic gmbh • Tel.: +49 (0) 8221/708-0 • Fax: +49 (0) 8221/708-80

SCO-735SS
SMD EMI REDUCTION SPREAD SPECTRUM CLOCK OSCILLATOR

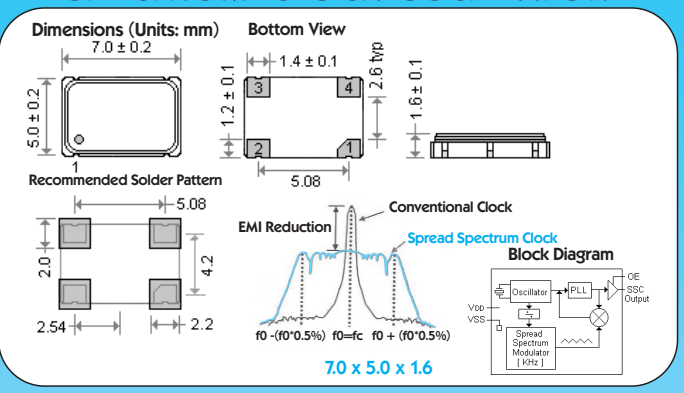

FEATURES

1. Ultra miniature package clock oscillator with size of 7.0 x 5.0 x 1.6 mm.
2. Low Profile.

Terminal	Connection
#1	Enable/Disable
#2	GND
#3	OUTPUT
#4	V_{DD}

ELECTRICAL SPECIFICATIONS		
Model	**Condition**	**SCO-735SS**
Frequency Range	All Conditions*	8.0 MHz ~ 128.0 MHz
Frequency Stability		±25 ppm / ±50 ppm / ±100 ppm
Operating Temperature Range		-10°C to +70°C, -40°C to +85°C option
Storage Temperature Range		0°C to +70°C, -55°C to +125°C
Power Supply Voltage		3.3 V D.C. ±5%
EMI Reduction		Up to 15 dB reduction typical. Fundamental & higher order harmonics.
Variation of EMI Reduction	Across Temp.	5% max. across -40°C to +85°C
Output Impedance		45 Ω to 90 Ω, depends on the output frequency, spread time & spread magnitude
Current Consumption	8.0~32.0 MHz	12 mA max.
	32.1~64.0 MHz	13 mA max.
	64.1~128.0 MHz	17 mA max.
Start Time		5 ms typical; 10 ms max.
Stabilization Time	PLL Lock	2 ms max.
Duty Cycle	CL=15pF at 1/2 V_{DD}	50% ±5%
Rise and Fall Time	at 10~90% V_{DD} at 90~10% V_{DD}	7 ns max.
Output Voltage	„Low" : V_{OL} „High" : V_{OH}	0.4 V_{DD} max.; I_{OL}=-4mA at spread spectrum output 2.4 V_{DD} min.; I_{OH}=-4mA at spread spectrum output
Output Logic		CMOS
Output Load		15 pF max.
Aging	at +25°C ±3°C	±5 ppm / year max.

All specifications subject to change without notice.

digital electronic gmbh • Tel.: +49 (0) 8221/708-0 • Fax: +49 (0) 8221/708-80

SCO-75HF
SMD TIGHT TOLERANCE OSCILLATOR

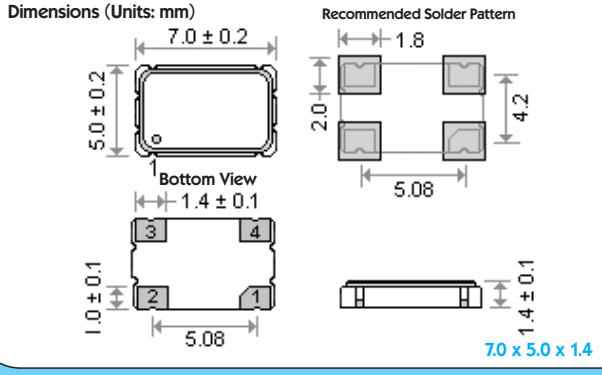

FEATURES

1. High frequency tolerance oscillator with size of 7.0 x 5.0 x 1.4 mm.
2. Supply Voltage: 1.8 V, 2.5 V or 3.3 V.

Terminal	Connection
#1**	Enable/Disable
#2	GND
#3	OUTPUT
#4	V_{DD}

ELECTRICAL SPECIFICATIONS			
Model		**Condition**	**SCO-75HF**
Frequency Range			1.0 MHz ~56.0 MHz
Frequency Tolerance		at +25°C	±2 ppm max.
Frequency Stability		-10°C to +70°C -40°C to +85°C	enter the desired stability after the code „C" enter the desired stability after the code „I" *
Operating Temperature Range			-10°C to +70°C commercial -40°C to +85°C industrial
Storage Temperature Range			-55°C to +150°C
Power Supply Voltage			1.8 V_{DD} ±10% / +2.5 V_{DD} ±10% / +3.3 V_{DD} ±10%;
Current Consumption at 15 pF Load		1.0~19.99 MHz	1.5 mA max. / 2.5 mA max. / 4.0 mA max.
		20~39.99 MHz	3.0 mA max. / 3.5 mA max. / 5.0 mA max.
		40.0~52.0 MHz	4.5 mA max. / 5.0 mA max. / 7.0 mA max.
Start Time			0.6 ms typical; 1.0 ms max.
Duty Cycle		at 1/2 V_{DD}	50% ±5%
Rise Tiem **Fall Time**		at 10~90% V_{DD} at 90~10% V_{DD}	2 ns typical; 4 ns max. 2 ns typical; 4 ns max.
Output Logic		„Low" 0 : V_{OL} „High" 1: V_{OH}	0.1 V_{DD} typical.; 0.4 V_{DD} max. 0.4 V_{DD} min.
Output Load			15 pF max.
Phase Jitter (RMS)		at 25 MHz, 3.3V	300 fs typical, at 12 kHz to 20 MHz integated
SSB Phase Noise	**Offset**	at 25 MHz, 3.3V	10 Hz / 100 Hz / 1 KHz / 10 KHz / 100 KHz / 1MHz / 10 MHz
	dBc / Hz typical		-65 / -100 / -130 / -145 / -148 / -152 / -155
Aging		at +25°C	±2 ppm / for first year max.

GENERAL SPECIFICATION: at Ta=25°C, CL=15pF

* for example: „C7" for ±7 ppm over commercial temperature range.
**Tri-state Function (Enable/Disable) on pad No.1

All specifications subject to change without notice.

digital electronic gmbh • Tel.: +49 (0) 8221/708-0 • Fax: +49 (0) 8221/708-80

SCO-75TSW
SMD TRUE SINE WAVE CLOCK OSCILLATOR

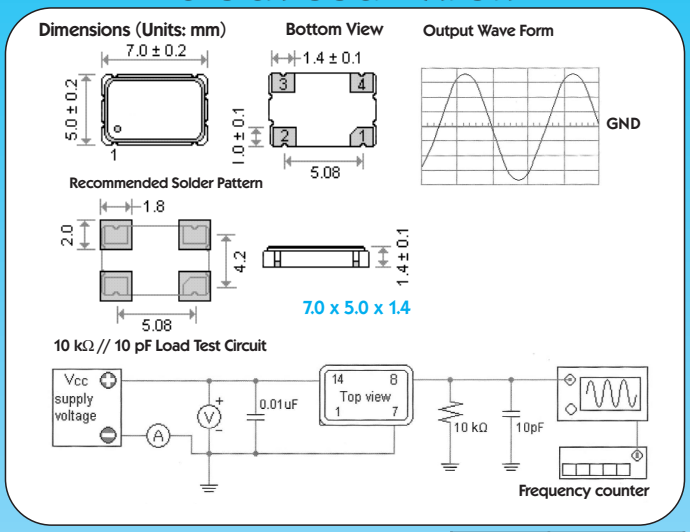

FEATURES

1. True sine wave clock oscillator with size of 7.0 x 5.0 x 1.4 mm.
2. Supply Voltage: 2.8 V, 3.3 V or 5.0 V.

Terminal	Connection
#1**	N.C.
#2	GND
#3	OUTPUT
#4	V_{DD}

ELECTRICAL SPECIFICATIONS		
Model	**Condition**	**SCO-75TSW**
Frequency Range		10.0 MHz ~30.0 MHz
Frequency Tolerance	at +25°C	±25 / ±50 / ±100 ppm max.
Frequency Stability	-10°C to +70°C -40°C to +85°C	enter the desired stability after the code „C" enter the desired stability after the code „I" *
Operating Temperature Range		-10°C to +70°C commercial -40°C to +85°C industrial
Storage Temperature Range		-55°C to +125°C
Power Supply Voltage		2.8 V_{DC} ±5% / +3.3 V_{DC} ±5% / +5.0 V_{DC} ±10%;
Current Consumption at 15 pF Load		1.0 mA max. / 1.5 mA max. / 1.2 mA max.
Start Time		2.0 ms typical
Load		10 kΩ // 10 pF load
Output Level		1.0 V_{p-p} typical
Harmonics		< -25dBc (frequency dependent) ***
Aging	at +25°C	±5 ppm / year max.

GENERAL SPECIFICATION: at Ta=25°C, CL=15pF

* for example: „C20" for ±20 ppm over commercial temperature range;
„I30" for ±30 ppm over industrial temperature range.

** No Tri-state (Enable/Disable) option.

*** Sub-Harmonics: none

All specifications subject to change without notice.

digital electronic gmbh • Tel.: +49 (0) 8221/708-0 • Fax: +49 (0) 8221/708-80

SCO-53
SMD OSCILLATOR

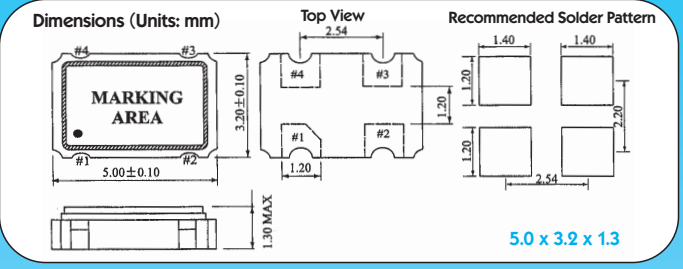

FEATURES

1. Ultra miniature package clock oscillator.
2. Tri-State enable/disable (E/D).
3. TTL/HCMOS compatible.
4. Tape and Reel.
5. IR Re-flow.
6. Supply Voltage: 5.0 V, 3.3 V, 2.5 V and 1.8 V.

Terminal	Connection
#1	E/D
#2	GND
#3	OUTPUT
#4	V_{DD}

APPLICATION

Portable PC, telecommunication devices and equipment.

ELECTRICAL SPECIFICATIONS

Model	Condition	SCO-53 (5.0V)	SCO-53 (3.3V)	SCO-53 (2.5V)	SCO-53 (1.8V)
Frequency Range	All Conditions*	1.0 MHz ~ 100 MHz	1.0 MHz ~ 133.0 MHz		
Frequency Stability		±25 ppm / ±50 ppm / ±100 ppm			
Operating Temperature Range		-20°C to +70°C, -40°C to +85°C option			
Storage Temperature Range		-55°C to +125°C			
Power Supply Voltage		5.0 V±10%	3.3 V±10%	2.5 V±10%	1.8 V±10%
Supply Current	1.0 MHz ~ 9.999 MHz	15 mA max.	8 mA max.	7 mA max.	6 mA max.
	10.0 MHz ~ 34.999 MHz	20 mA max.	10 mA max.	8 mA max.	7 mA max.
	35.0 MHz ~ 49.999 MHz	35 mA max.	25 mA max.	20 mA max.	15 mA max.
	50.0 MHz ~ 133.0 MHz	40 mA max.	35 mA max.	30 mA max.	25 mA max.
Output Symmetry	at 1/2 V_{DD}	45% ~ 55%			
Rise Time	10% V_{DD} ~ 90% V_{DD}	5 ns max.	5 ns max.	6 ns max.	7 ns max.
Fall Time	90% V_{DD} ~ 10% V_{DD}	5 ns max.	5 ns max.	6 ns max.	7 ns max.
Output Voltage	V_{OH} V_{OL}	90% V_{DD} min. 10% V_{DD} max.			
Output Load HCMOS		15pF max.			
Start Time		10 ms max.			
Stand-by Function		Yes			
Pin 1, Tri-State Function		pin 1 = H or open ... Output active at pin 3 pin 1 =L ... high impedance at pin 3 is not active			
Aging first year	at +25°C ±3°C	±2 ppm / year max.			

OPTIONS: 0,01 uF bypass capacitor should be placed between V_{DD} (pin 4) and GND (pin 2) to minimize power supply line noise. * Include: 25°C tolerance, operating temperature range, input voltage change, aging, load change, shock and vibration.

All specifications subject to change without notice.

digital electronic gmbh • Tel.: +49 (0) 8221/708-0 • Fax: +49 (0) 8221/708-80

SCO-53 *NEW*
SMD 1.0 V OSCILLATOR

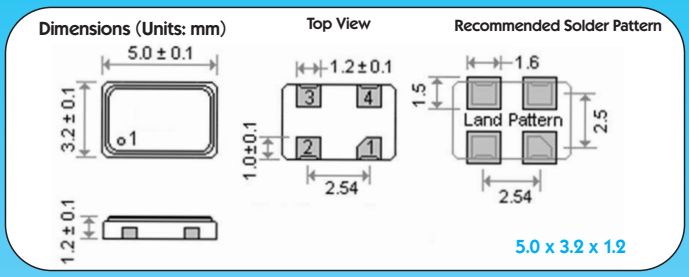

FEATURES

1. Ultra small SMD seam clock crystal oscillator units.
2. Tri-State enable / disable (E/D) availble.
3. CMOS output.
4. Tape and Reel.
5. Supply voltage: 1.0 V

Terminal	Connection
#1	E/D
#2	GND
#3	OUTPUT
#4	V_{DD}

APPLICATION

Portable PC, telecommunication devices and equipment.

ELECTRICAL SPECIFICATIONS		
Model	**Condition**	**SCO-53 (1.0 V)**
Frequency Range	All Conditions*	312.0 kHz ~60.0 MHz
Frequency Stability		±25 ppm / ±50 ppm / ±100 ppm
Operating Temperature Range		-10°C to +70°C, -40°C to +85°C option
Storage Temperature Range		-50°C to +100°C
Power Supply Voltage		1.0 V ±5%
Supply Current	312 KHz ~ 30 MHz	2 mA max.
	30.0 MHz ~ 60.0 MHz	4 mA max.
Output Symmetry	at 1/2 V_{DD}	50% ±10% (50% ±5% is available)
Rise Time	10% V_{DD} ~ 90% V_{DD}	6 ns max.
Fall Time	90% V_{DD} ~ 10% V_{DD}	
Output Voltage	V_{OH} V_{OL}	90% V_{DD} min. 10% V_{DD} max.
Output Load HCMOS		15pF typical (30 pF, 50 pF öoad availble)
Start Time		10 ms typical
Stand-by Function		Yes
Pin 1, Tri-State Function		pin 1 = H or open ... Output active at pin 3 pin 1 =L ... high impedance at pin 3 is not active
Aging first year	at +25°C ±3°C	±3 ppm / year max.

digital electronic gmbh • Tel.: +49 (0) 8221/708-0 • Fax: +49 (0) 8221/708-80

SCO-53SS
SMD EMI REDUCTION SPREAD SPECTRUM CLOCK OSCILLATOR

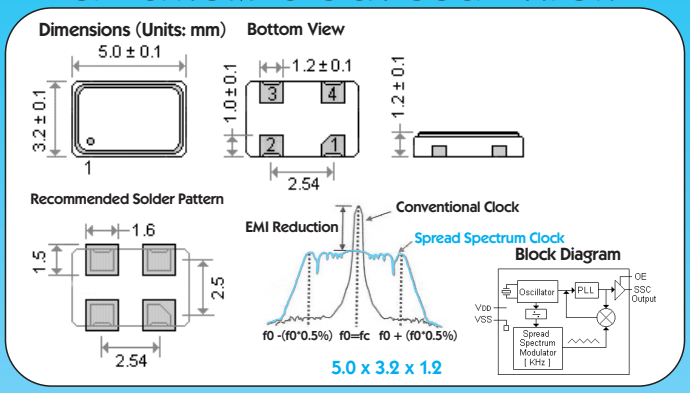

FEATURES

1. Ultra miniature package clock oscillator with size of 5.0 x 3.2 x 1.2 mm.
2. Low Profile.

Terminal	Connection
#1	Enable/Disable
#2	GND
#3	OUTPUT
#4	V_{DD}

ELECTRICAL SPECIFICATIONS		
Model	**Condition**	**SCO-53SS**
Frequency Range		8.0 MHz ~ 128 MHz
Frequency Stability	over oper. tempr.	±25 ppm / ±50 ppm / ±100 ppm
Operating Temperature Range		-10°C to +70°C, -40°C to +85°C option
Storage Temperature Range		0°C to +70°C, -55°C to +125°C
Power Supply Voltage		3.3 V_{DC} ±5%
EMI Reduction		Up to 15 dB reduction typical. Fundamental & higher order harmonics.
Variation of EMI Reduction	Across Temp.	5% max. across -40°C to +85°C
Output Impedance		45Ω to 90Ω, depends on the output frequency, spread time & spread magnitude
Current Consumption	8.0~32.0 MHz	12 mA max.
	32.1~64.0 MHz	13 mA max.
	64.1~128.0 MHz	17 mA max.
Start Time		5 ms typical; 10 ms max.
Stabilization Time	PLL Lock	2 ms max.
Duty Cycle	CL=15pF at 1/2 V_{DD}	50% ±5%
Rise and Fall Time	at 10~90% V_{DD} at 90~10% V_{DD}	7 ns max.
Output Voltage	„Low" : V_{OL} „High" : V_{OH}	0.4 V_{DD} max.; I_{OL}=-4mA at spread spectrum output 2.4 V_{DD} min.; I_{OH}=-4mA at spread spectrum output
Output Logic		CMOS
Output Load		15 pF max.
Aging	at +25°C ±3°C	±5 ppm / year max.

All specifications subject to change without notice.

digital electronic gmbh • Tel.: +49 (0) 8221/708-0 • Fax: +49 (0) 8221/708-80

SCO-53HF
SMD TIGHT TOLERANCE OSCILLATOR

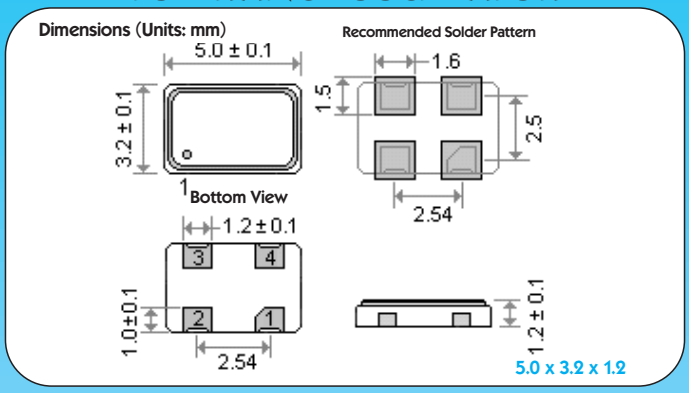

FEATURES

1. High frequency tolerance oscillator with size of 5.0 x 3.2 x 1.2 mm.
2. Supply Voltage: 3.3 V, 2.5 V and 1.8 V.

Terminal	Connection
#1**	Enable/Disable
#2	GND
#3	OUTPUT
#4	V_{DD}

ELECTRICAL SPECIFICATIONS

Model		Condition	SCO-53HF
Frequency Range			1.0 MHz ~56.0 MHz
Frequency Tolerance		at +25°C	±2 ppm max.
Frequency Stability		-10°C to +70°C -40°C to +85°C	enter the desired stability after the code „C" enter the desired stability after the code „I" *
Operating Temperature Range			-10°C to +70°C commercial -40°C to +85°C industrial
Storage Temperature Range			-55°C to +150°C
Power Supply Voltage			1.8 V_{DD} ±10% / +2.5 V_{DD} ±10% / +3.3 V_{DD} ±10%;
Current Consumption at 15 pF Load		1.0~19.99 MHz	1.5 mA max. / 2.5 mA max. / 4.0 mA max.
		20.0~39.99 MHz	3.0 mA max. / 3.5 mA max. / 5.0 mA max.
		40.0~52.0 MHz	4.5 mA max. / 5.0 mA max. / 7.0 mA max.
Start Time			0.6 ms typical; 1.0 ms max.
Duty Cycle		at 1/2 V_{DD}	50% ±5%
Rise Tiem Fall Time		at 10~90% V_{DD} at 90~10% V_{DD}	2 ns typical; 4 ns max. 2 ns typical; 4 ns max.
Output Logic		„Low" 0 : V_{OL} „High" 1: V_{OH}	0.1 V_{DD} typical.; 0.4 V_{DD} max. 0.4 V_{DD} min.
Output Load			15 pF max.
Phase Jitter (RMS)		at 25 MHz, 3.3V	300 fs typical, at 12 kHz to 20 MHz integrated
SSB Phase Noise	Offset	at 25 MHz, 3.3V	10 Hz / 100 Hz / 1 kHz / 10 kHz / 100 kHz / 1 MHz / 10 MHz
	dBc/Hz typical		-65 / -100 / -130 / -145 / -148 / -152 / -155
Aging for first year		at +25°C	±2 ppm / year max.

GENERAL SPECIFICATION: at Ta=25°C, CL=15pF

* for example: „C7" for ±7 ppm over commercial temperature range.
**Tri-state Function (Enable/Disable) on pad No.1

All specifications subject to change without notice.

digital electronic gmbh • Tel.: +49 (0) 8221/708-0 • Fax: +49 (0) 8221/708-80

SCO-53TSW
SMD TRUE SINE WAVE CLOCK OSCILLATOR

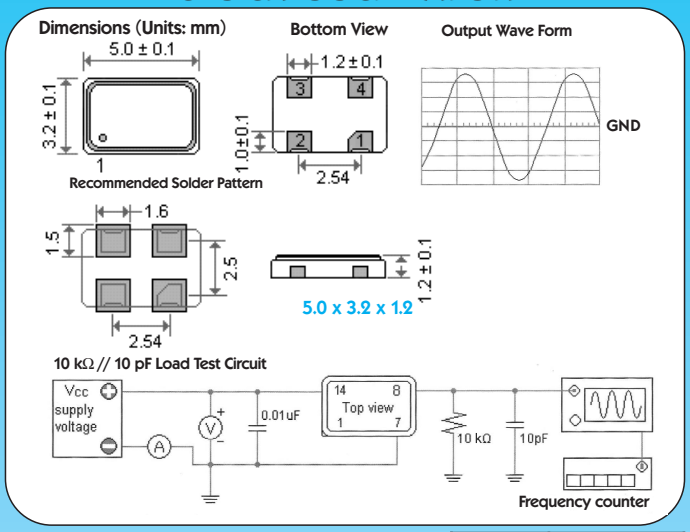

FEATURES

1. True sine wave clock oscillator with size of 5.0 x 3.2 x 1.2 mm.
2. Supply Voltage: 5.0 V, 3.3 V and 2.8 V.

Terminal	Connection
#1**	N.C.
#2	GND
#3	OUTPUT
#4	V_{DD}

ELECTRICAL SPECIFICATIONS		
Model	**Condition**	**SCO-53TSW**
Frequency Range		10.0 MHz ~30.0 MHz
Frequency Tolerance	at +25°C	±25 ppm / ±50 ppm / ±100 ppm max.
Frequency Stability	-10°C to +70°C -40°C to +85°C	enter the desired stability after the code „C" enter the desired stability after the code „I" *
Operating Temperature Range		-10°C to +70°C commercial -40°C to +85°C industrial
Storage Temperature Range		-55°C to +125°C
Power Supply Voltage		+2.8 V_{DC} ±5% / +3.3 V_{DC} ±5% / +5.0 V_{DC} ±10%;
Current Consumption at 15 pF Load		1.0 mA max. / 1.5 mA max. / 1.2 mA max.
Start Time		2.0 ms typical
Load		10 kΩ // 10 pF load
Output Level		1.0 V_{p-p} typical
Harmonics		< -25dBc (frequency dependent) ***
Aging	at +25°C	±5 ppm / year max.

GENERAL SPECIFICATION: at Ta=25°C, CL=15pF

* for example: „C20" for ±20 ppm over commercial temperature range;
„I30" for ±30 ppm over industrial temperature range.

** No Tri-state (Enable/Disable) option. // *** Sub-Harmonics: none

All specifications subject to change without notice.

digital electronic gmbh • Tel.: +49 (0) 8221/708-0 • Fax: +49 (0) 8221/708-80

SCO-32
SMD OSCILLATOR

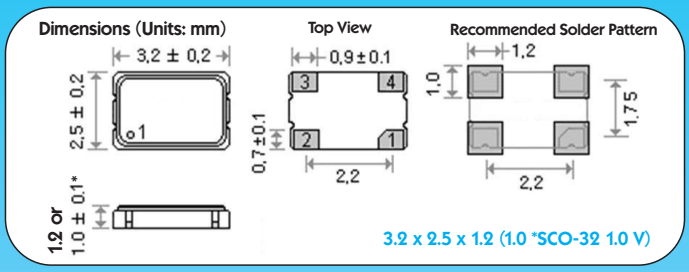

FEATURES

1. Ultra miniature ceramic package clock oscillator.
2. Tri-State enable/disable (E/D).
3. TTL/HCMOS compatible; 1.0 V - CMOS Output
4. Tape and Reel.
5. IR Re-flow.
6. Supply voltage: 5.0 V, 3.3 V, 2.5 V, 1.8 V and **1.0 V** option.

Terminal	Connection
#1	E/D
#2	GND
#3	OUTPUT
#4	V_{DD}

APPLICATION

Portable PC, telecommunication devices and equipment.

ELECTRICAL SPECIFICATIONS

Model	Condition	SCO-32 (5.0V)	SCO-32 (3.3V)	SCO-32 (2.5V)	SCO-32 (1.8V)	SCO-32 (1.0V)
Frequency Range	All Conditions*	1.0 MHz ~ 125.00 MHz				312.0 kHz ~ 60.00 MHz
Frequency Stability		±25 ppm / ±50 ppm / ±100 ppm				
Operating Temperature Range		-20°C to +70°C, -40°C to +85°C option				-10°C to +70°C, -40°C to +85°C option
Storage Temperature Range		-55°C to +125°C				-50°C to +100°C
Power Supply Voltage		5.0 V ±10%	3.3 V ±10%	2.5 V ±10%	1.8 V ±10%	**1.0 V ±5%**
Supply Current	1.0 MHz ~ 9.999 MHz	15 mA max.	8 mA max.	7 mA max.	6 mA max.	**312.0 kHz~ 30.00 MHz:** 2 mA max.
	10.0 MHz ~ 34.999 MHz	20 mA max.	10 mA max.	8 mA max.	7 mA max.	
	35.0 MHz ~ 49.999 MHz	35 mA max.	25 mA max.	20 mA max.	15 mA max.	**30.0 MHz ~ 60.00 MHz:** 4 mA max.
	50.0 MHz ~ 54.0 MHz	40 mA max.	35 mA max.	30 mA max.	25 mA max.	
Output Symmetry	at 1/2 V_{DD}	45% ~ 55%				50% ±10% (±5% available)
Rise Time	10% V_{DD} ~ 90% V_{DD}	5 ns max.	5 ns max.	6 ns max.	7 ns max.	6 ns max.
Fall Time	90% V_{DD} ~ 10% V_{DD}	5 ns max.	5 ns max.	6 ns max.	7 ns max.	6 ns max.
Output Voltage	V_{OH} V_{OL}	90% V_{DD} min. 10% V_{DD} max.				
Output Load HCMOS		15 pF typical				
Start Time		10 ms typical				
Stand-by Function		Yes				
Pin 1, Tri-State Function		pin 1 = H or open ... Output active at pin 3 pin 1 =L ... high impedance at pin 3 is not active				
Aging for first year	at +25°C ±3°C	±2 ppm / year max.				±3 ppm / year max.

OPTIONS: 0,01 uF bypass capacitor should be placed between V_{DD} (pin 4) and GND (pin 2) to minimize power supply line noise. * Include: 25°C tolerance, operating temperature range, input voltage change, aging, load change, shock and vibration.

All specifications subject to change without notice.

digital electronic gmbh • Tel.: +49 (0) 8221/708-0 • Fax: +49 (0) 8221/708-80

SCO-22
SMD OSCILLATOR

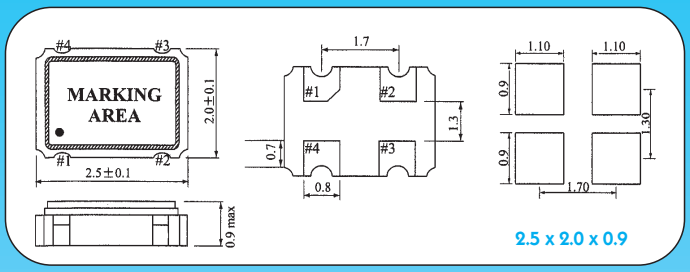

FEATURES

1. Ultra miniature ceramic package clock oscillator.
2. Tri-State enable/disable (E/D).
3. TTL/HCMOS compatible.
4. Tape and Reel.
5. IR Re-flow.
6. Supply Voltage: 3.3V, 2.8V, 1.8V and 1.5V option.

Terminal	Connection
#1	E/D
#2	GND
#3	OUTPUT
#4	V_{DD}

APPLICATION

Portable PC, telecommunication devices and equipment.

ELECTRICAL SPECIFICATIONS					
Model	**Condition**	**SCO-22 (3.3V)**	**SCO-22 (2.8V)**	**SCO-22 (1.8V)**	**SCO-22 (1.5V)**
Frequency Range	All Conditions*	1.0 MHz ~54.0 MHz			
Frequency Stability		±25 ppm / ±50 ppm / ±100 ppm			
Operating Temperature Range		-20°C to +70°C, -40°C to +85°C option			
Storage Temperature Range		-55°C to +125°C			
Power Supply Voltage		3.3 V±10%	2.8 V±10%	1.8 V±10%	1.5 V±10%
Supply Current	1.0 MHz ~ 9.999 MHz	8 mA max.	7 mA max.	6 mA max.	5 mA max.
	10.0 MHz ~ 34.999 MHz	10 mA max.	8 mA max.	7 mA max.	6 mA max.
	35.0 MHz ~ 49.999 MHz	25 mA max.	20 mA max.	15 mA max.	15 mA max.
	50.0 MHz ~ 54.0 MHz	35 mA max.	30 mA max.	25 mA max.	25 mA max.
Output Symmetry	at 1/2 V_{DD}	40% ~ 60%, 45% ~ 55% option			
Rise Time	10% V_{DD} ~ 90% V_{DD}	5 ns max.	6 ns max.	7 ns max.	7 ns max.
Fall Time	90% V_{DD} ~ 10% V_{DD}	5 ns max.	6 ns max.	7 ns max.	7 ns max.
Output Voltage	V_{OH} V_{OL}	90% V_{DD} min. 10% V_{DD} max.			
Output Load HCMOS		15 pF max.			
Start Time		10 ms max.			
Stand-by Function		Yes			
Pin 1, Tri-State Function		pin 1 = H or open ... Output active at pin 3 pin 1 =L ... high impedance at pin 3			
Aging first year	at +25°C ±3°C	±5 ppm / year max.			

OPTIONS: 0,01 uF bypass capacitor should be placed between V_{DD} (pin 4) and GND (pin 2) to minimize power supply line noise. * Include: 25°C tolerance, operating temperature range, input voltage change, aging, load change, shock and vibration.

All specifications subject to change without notice.

digital electronic gmbh • Tel.: +49 (0) 8221/708-0 • Fax: +49 (0) 8221/708-80

SCO-20
SMD OSCILLATOR

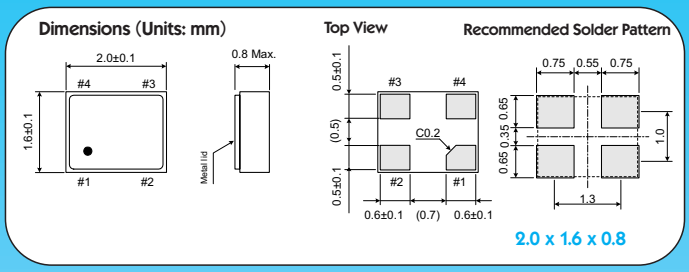

FEATURES

1. Compact & light design: 2.0 x 1.6 x 0.8 mm max. Weight: 8.6 mg.
2. High accuracy. Tri-State enable/disable (E/D).
3. Ceramic package and metal lid sealed by electron beam ensure high reliability.
4. Supply Voltage: 3.3 V, 2.5 V and 1.8 V option.
5. Lead-free reflow soldering is available.

Terminal	Connection
#1	E/D
#2	GND
#3	OUTPUT
#4	V_{DD}

#2 is connected to the metal lid.

APPLICATION

Mobile communication, wireless modules.

ELECTRICAL SPECIFICATIONS				
Model		**SCO-20**		
Frequency Range		1.0 MHz ~80.0 MHz		
Frequency Stability		±7 ppm / ±10 ppm / ±15 ppm / ±20 ppm / ±30 ppm / ±50 ppm		
Operating Temperature Range		-20°C to +70°C, -30°C to +85°C,-40°C to +85°C option		
Storage Temperature Range		-40°C to +85°C, -40°C to +105°C option		
Supply Voltage (V_{DD})		1.8 V_{DC} ±10%	2.5 V_{DC} ±10%	3.3 V_{DC} ±10%
Current Consumption during Operation		3.0 mA max.; F = 40MHz, V_{DD} = 3.0 V, no load 10 µA max.; Stand-by = „L"		
Output Load		15 pF, max., CMOS		
Output Voltage	V_{OH} V_{OL}	V_{DD} - 0.4 V min.; I_{OH} = -4 mA 0.4 V max.; I_{OL} = +4 mA		
Rise Time	10% V_{DD} ~ 90% V_{DD}	5.0 ns max.		
Fall Time	90% V_{DD} ~ 10% V_{DD}	5.0 ns max.		
Duty Cycle		50% ± 5%		
Startup Time		2.0 ms max.; V_{DD} = 3.3 V 5.0 ms max.; V_{DD} = 1.8 V		
Random Jitter* (RJ)		3.7 ps typ.; V_{DD} = 3.3 V		
Total Jitter* (TJ)		51 ps typ.; V_{DD} = 3.3 V, TJ = n x RJ (n ≈ 14.1, BER = 10^{-12})		
Phase Jitter		1.0 ps; V_{DD} = 3.3 V Offset Frequency 12 kHz ~ 5 MHz		
Stand-by Terminal Function (V)	High	0.7 V_{DD} min.; Output enable		
	Low	0.3 V_{DD} max.; Oscillation stop and high impendance output		

OPTIONS: *Measured by wave crest 3100C. For operational stability, the bypass capacitor (0.01 mF ~0.1 mF) between V_{DD} & GND should be placed as close to the product as possible. Other specifications can be available.

All specifications subject to change without notice.

digital electronic gmbh • Tel.: +49 (0) 8221/708-0 • Fax: +49 (0) 8221/708-80

SCO-16
SMD OSCILLATOR

Dimensions (Units: mm)

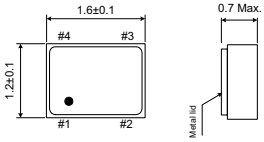

Top View

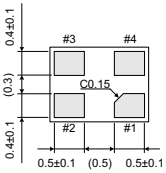

Recommended Solder Pattern

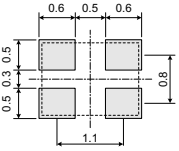

1.6 x 1.2 x 0.7

FEATURES

1. The world´s smallest quartz oscillator : 1.6 x 1.2 x 0.7 mm max. Weight: 4.1 mg.
2. Ceramic package and metal lid sealed by electron beam ensure high reliability.
3. Supply Voltage: 3.3 V, 2.5 V and 1.8 V option.
4. Lead-free reflow soldering is available.

Terminal	Connection
#1	Enable/Disable
#2	GND
#3	OUTPUT
#4	V_{DD}

#2 is connected to the metal lid.

APPLICATION

Mobile communication, wireless modules.

ELECTRICAL SPECIFICATIONS				
Model		**SCO-16**		
Frequency Range		1.0 MHz ~80.0 MHz		
Frequency Stability		±7 ppm / ±10 ppm / ±15 ppm / ±20 ppm / ±30 ppm / ±50 ppm		
Operating Temperature Range		-20°C to +70°C, -30°C to +85°C, -40°C to +85°C option		
Storage Temperature Range		-40°C to +85°C, -40°C to +105°C option		
Supply Voltage (V_{DD})		1.8 V_{DC} ±10%	2.5 V_{DC} ±10%	3.3 V_{DC} ±10%
Current Consumption during Operation		2.0 mA max.; F = 40 MHz, V_{DD} = 3.0 V, no load 10 µA max.; Stand-by = „L"		
Output Load		15 pF, max., CMOS		
Output Voltage	V_{OH} V_{OL}	V_{DD} - 0.4 V min., I_{OH} = -4 mA 0.4 V max.; I_{OL} = +4 mA		
Rise Time	10% V_{DD} ~ 90% V_{DD}	4.5 ns max.		
Fall Time	90% V_{DD} ~ 10% V_{DD}			
Duty Cycle		50% ± 5%		
Startup Time		2.0 ms max.; V_{DD} = 3.3 V 5.0 ms max.; V_{DD} = 1.8 V		
Random Jitter* (RJ)		2.9 ps; V_{DD} = 3.3 V		
Total Jitter* (TJ)		40 ps; V_{DD} = 3.3 V, TJ = n x RJ (n ≈ 14.1, BER = 10^{-12})		
Phase Jitter		1.0 ps; V_{DD} = 3.3 V Offset Frequency 12 kHz ~ 5 MHz		
Stand-by Terminal Function (V)	High	0.7 V_{DD} min.; Output enable		
	Low	0.3 V_{DD} max.; Oscillation stop and high impendance output		

OPTIONS: *Measured by wave crest 3100C. For operational stability, the bypass capacitor (0.01 mF ~0.1 mF) between V_{DD} & GND should be placed as close to the product as possible. Other specifications can be available.

All specifications subject to change without notice.

digital electronic gmbh • Tel.: +49 (0) 8221/708-0 • Fax: +49 (0) 8221/708-80

SCO-75P • SCO-53P • SCO-32P • SCO-22P
PROGRAMMABLE SMD OSCILLATOR

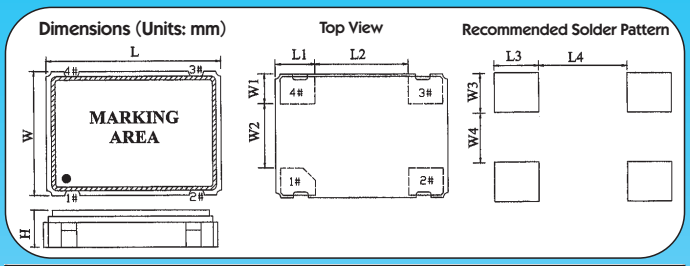

DIMENSIONS											
Model	**L**	**W**	**H max.**	**L1**	**L2**	**L3**	**L4**	**Pin W1**	**W2**	**W3**	**W4**
SCO-75P	7.0	5.0	1.5	0.6	3.8	1.8	3.6	1.2	2.6	1.6	2.0
SCO-53P	5.0	3.2	1.3	1.83	1.34	1.4	1.14	1.0	1.2	1.2	1.0
SCO-32P	3.2	2.5	1.2	1.0	1.2	1.2	1.0	0.75	1.0	0.95	0.8
SCO-22P	2.5	2.0	0.9	0.8	0.9	1.0	0.7	0.7	0.6	0.9	0.4

FEATURES

1. Miniature package.
2. Output enable (OE) or standby (ST).
3. Supply Voltage: 3.3 V, 2.5 V and 1.8 V option.
4. Short mass production lead time by PLL technology.

Terminal	Connection
#1	Enable/Disable
#2	GND
#3	OUTPUT
#4	V_{DD}

ELECTRICAL SPECIFICATIONS				
Model	**Condition**	**SCO-75P SCO-53P SCO-32P SCO-22P (3.3 V)**	**SCO-75P SCO-53P SCO-32P SCO-22P (2.5 V)**	**SCO-75P SCO-53P SCO-32P SCO-22P (1.8 V)**
Frequency Range		1.0~200.0 MHz	1.0~166.0 MHz	1.0~133.0 MHz
Frequency Stability	All Conditions*	±25 ppm / ±50 ppm / ±100 ppm		
Operating Temperature Range		-20°C to +70°C, -40°C to +85°C option		
Storage Temperature Range		-55°C to +125°C		
Power Supply Voltage		3.3 V ±10%	2.5 V ±10%	1.8 V ±10%
Supply Current		30 mA max.	25 mA max.	20 mA max.
Output Disable Current	OE=GND	8 mA max.		
Standby Current	ST=GND	10 µA max.		
Output Symmetry	at 1/2 V_{DD}	40% ~ 60%, 45% ~ 55% option		
Rise Time	10% V_{DD} ~ 90% V_{DD}	8 ns max.		
Fall Time	90% V_{DD} ~ 10% V_{DD}	8 ns max.		
Output Voltage	V_{OH} V_{OL}	90% V_{DD} min. 10% V_{DD} max.		
Output Load HCMOS		15 pF max.		
Start Time		10 ms max.		
Peak to Peak Jitter	10.000 sample measured	70 ps typical		
Pin 1, Tri-State Function		pin 1= H or open ... Output active at pin 3 pin 1= L ... high impedance at pin 3		
Aging first year	at +25°C ±3°C	±2 ppm / year max.		

OPTIONS: 0,01 uF bypass capacitor should be placed between V_{DD} (pin 4) and GND (pin 2) to minimize power supply line noise. * Include: 25°C tolerance, operating temperature range, input voltage change, aging, load change, shock and vibration.

All specifications subject to change without notice.

digital electronic gmbh • Tel.: +49 (0) 8221/708-0 • Fax: +49 (0) 8221/708-80

VXO-61 • VXO-63

Voltage Controlled Crystal Oscillators

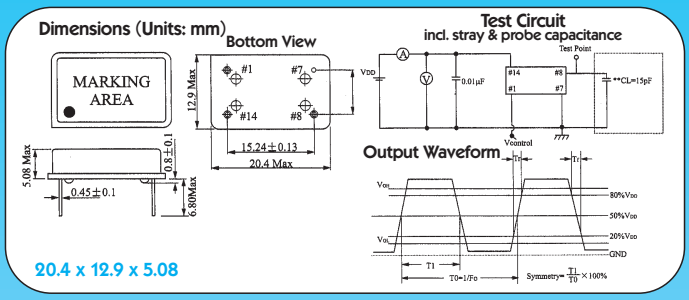

20.4 x 12.9 x 5.08

FEATURES

1. 14 Pin full size.
2. Industry standard.
3. Wide frequency range.
4. Low cost.
5. Resistance weld package.
6. Supply Voltage: 5.0 V and 3.3 V available.

Terminal	Connection
#1	V Control
#7	GND
#8	OUTPUT
#14	V_{DD}

APPLICATION

Phase locked loops, phase shift keying, in telecommunication applications as ADSL, cable modem etc.

ELECTRICAL SPECIFICATIONS				
Model		**Condition**	**VXO-61**	**VXO-63**
Frequency Range			1.0 MHz ~100.0 MHz	
Frequency Stability		All Conditions*	±15 ppm	
Temperature Stability		over T_{OPR}	±15 ppm / ±25 ppm / ±50 ppm	
Stability vs Power Change		V_{DD} ±5%	±5 ppm	
Stability vs Load Change		15 pF ±10%	±3 ppm	
Pullability		Over Control Voltage Range	±50, ±100, ±200 ppm	±50, ±100, ±150 ppm
Control Voltage Range			0.5 V~ 4.5 V	0.3 V~ 3.0 V
Operating Temperature Range			0°C to +70°C, -40°C to +85°C option	
Storage Temperature Range			-55°C to +125°C	
Supply Voltage			5.0 V ±5%	3.3 V ±5%
Supply Current		1.0 MHz ~39.999 MHz	25 mA max.	20 mA max.
		40.0 MHz ~100.0 MHz	35 mA max.	30 mA max.
Output Symmetry		at 1/2 V_{DD}	40% ~ 60%, 45% ~ 55% option	
Rise Time		20% V_{DD} ~ 80% V_{DD}	8 ns max.	10 ns max.
Fall Time		80% V_{DD} ~ 20% V_{DD}	8 ns max.	10 ns max.
Output Voltage	V_{OH} V_{OL}		90% V_{DD} min. 10% V_{DD} max.	
Output Load			15 pF max.	
Start Time			10 ms max.	
Aging first year		at +25°C ±3°C	±5 ppm / year max.	

OPTIONS: for frequency over 40.0 MHz, please consult us. * Include: 25°C tolerance, operating temperature range, input voltage change, aging, load change, shock and vibration.

All specifications subject to change without notice.

digital electronic gmbh • Tel.: +49 (0) 8221/708-0 • Fax: +49 (0) 8221/708-80

VXO-81 • VXO-83

Voltage Controlled Crystal Oscillators

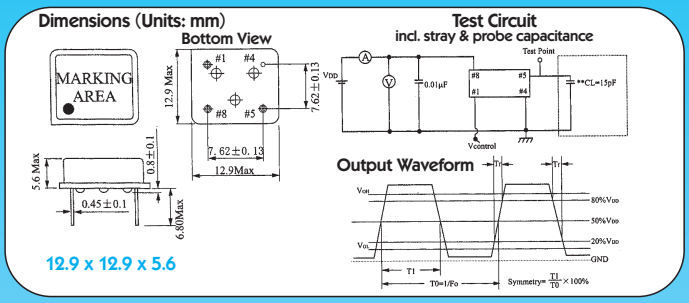

FEATURES

1. 8 Pin half size.
2. Industry standard.
3. Wide frequency range.
4. Low cost.
5. Resistance weld package.
6. Supply Voltage: 5.0 V and 3.3 V available.

Terminal	Connection
#1	V Control
#4	GND
#5	OUTPUT
#8	V_{DD}

APPLICATION

Phase locked loops, phase shift keying, in telecommunication applications as ADSL, cable modem etc.

ELECTRICAL SPECIFICATIONS

Model		Condition	VXO-81	VXO-83
Frequency Range			1.0 MHz ~40.0 MHz	
Frequency Stability		All Conditions*	±15 ppm	
Temperature Stability		over T_{OPR}	±15 ppm / ±25 ppm / ±50 ppm	
Stability vs Power Change		V_{DD} ±5%	±5 ppm	
Stability vs Load Change		15 pF ±10%	±3 ppm	
Pullability		Over Control Voltage Range	±50, ±100, ±200 ppm	±50, ±100, ±150 ppm
Control Voltage Range			0.5 V~ 4.5 V	0.3 V~ 3.0 V
Operating Temperature Range			0°C to +70°C, -40°C to +85°C option	
Storage Temperature Range			-55°C to +125°C	
Supply Voltage			5.0 V±5%	3.3 V±5%
Supply Current		1.0 MHz ~23.999 MHz	15 mA max.	10 mA max.
		24.0 MHz ~40.0 MHz	25 mA max.	20 mA max.
Output Symmetry		at 1/2 V_{DD}	40% ~ 60%, 45% ~ 55% option	
Rise Time		20% V_{DD} ~ 80% V_{DD}	8 ns max.	10 ns max.
Fall Time		80% V_{DD} ~ 20% V_{DD}	8 ns max.	10 ns max.
Output Voltage	V_{OH}		90% V_{DD} min.	
	V_{OL}		10% V_{DD} max.	
Output Load			15 pF max.	
Start Time			10 ms max.	
Aging (at +25°C) first year		at +25°C ±3°C	±5 ppm / year max.	

OPTIONS: 0,01 uF bypass capacitor should be placed between V_{DD} (pin 4) and GND (pin 2) to minimize power supply line noise. * Include: 25°C tolerance, operating temperature range, input voltage change, aging, load change, shock and vibration.

All specifications subject to change without notice.

digital electronic gmbh • Tel.: +49 (0) 8221/708-0 • Fax: +49 (0) 8221/708-80

VC-TCXO-801

SMD Voltage Controlled Temperature Compensated Crystal Oscillators

Dimensions (Units: mm)

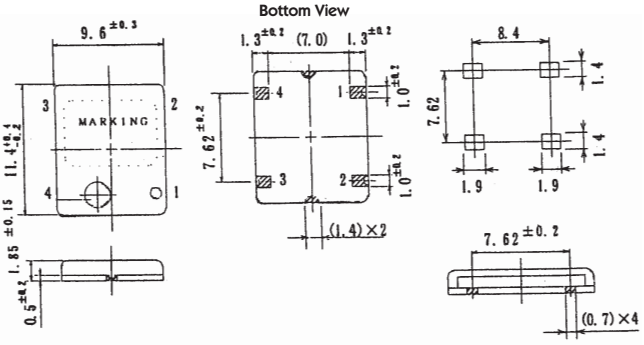

11.4 x 9.6 x 1.85

FEATURES

1. SMD miniature size.
2. Low power consumption.
3. High frequency stability.

APPLICATION

Communication equipment,
portable telephone, PHS, GPS, etc.

Terminal	Connection
#1	V Control or N.C.
#2	GND
#3	OUTPUT
#4	Vcc

ELECTRICAL SPECIFICATIONS

Model		TCXO TXO-801BL	VC-TCXO VXO-801FL	VC-TCXO VXO-801TL
Standard Frequency		12.8 MHz	13.0 MHz	14.4 MHz
Frequency Range		10.0 MHz ~ 40.0 MHz		
Frequency Stability	vs Temperature	±2.5 ppm at -30°C to +70°C		
	vs Supply Voltage	±0.3 ppm at +3.0 V±5%		
	Aging (at +25°C) first year	±1 ppm max.		
Frequency Adjustment		±3 ppm min.		Trimmer less
Frequency Deviation			±5 ppm~±10 ppm (+1.5 V±1.0 V)	±8 ppm~±14 ppm (+1.5 V±1.0 V)
Output Voltage		0.8 V_{p-p} min.		
Load		10 kΩ / 10 pF		
Supply Voltage		+3.0 V ±5%		
Supply Current		1.5 mA max.		

OPTIONS: +5.0 V is available.

All specifications subject to change without notice.

digital electronic gmbh • Tel.: +49 (0) 8221/708-0 • Fax: +49 (0) 8221/708-80

VC-TCXO-802

SMD Voltage Controlled Temperature Compensated Crystal Oscillators

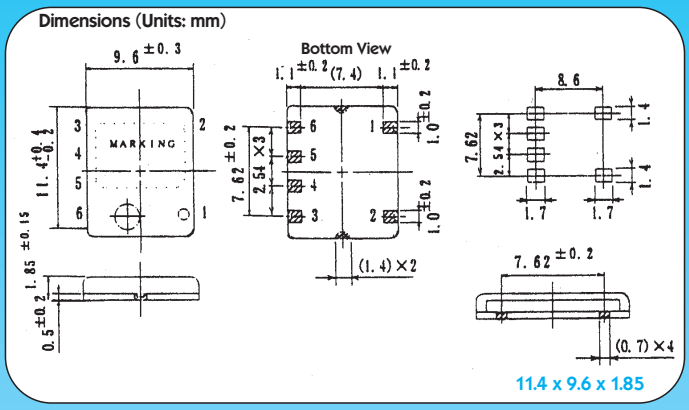

FEATURES

1. SMD miniature size.
2. Low power consumption.
3. High frequency stability.

Terminal	Connection
#1 ,2, 4	GND
#3	OUTPUT
#5	V Control or N.C.
#6	Vcc

APPLICATION

Communication equipment,
portable telephone, PHS, GPS, etc.

ELECTRICAL SPECIFICATIONS				
Model		**TCXO TXO-802BL**	**VC-TCXO VXO-802FL**	**VC-TCXO VXO-802TL**
Standard Frequency		12.8 MHz	13.0 MHz	14.4 MHz
Frequency Range		10.0 MHz ~ 40.0 MHz		
Frequency Stability	**vs Temperature**	±2.5 ppm at -30°C to +70°C		
	vs Supply Voltage	±0.3 ppm at +3.0 V ±5%		
	Aging (at +25°C) first year	±1 ppm max.		
Frequency Adjustment		±3 ppm min.		Trimmer less
Frequency Deviation			±5 ppm ~±10 ppm (+1.5 V±1.0 V)	±8 ppm~ ±14 ppm (+1.5 V±1.0 V)
Output Voltage		0.8 $V_{p\text{-}p}$ min.		
Load		10 kΩ / 10 pF		
Supply Voltage		+3.0 V ±5%		
Supply Current		1.5 mA max.		

OPTIONS: +5.0 V is available.

digital electronic gmbh • Tel.: +49 (0) 8221/708-0 • Fax: +49 (0) 8221/708-80

VXO-S1 • VXO-S3

SMD Voltage Controlled Crystal Oscillators

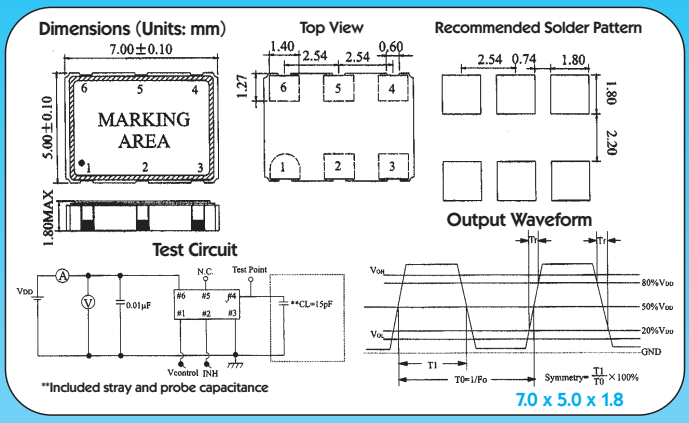

FEATURES

1. Miniature package. Industry standard.
2. TTL / HCMOS output compatible.
3. Tri-State enable/disable (E/D).
4. Tape and Reel.
5. Supply Voltage: 5.0 V and 3.3 V available.

Terminal	Connection
#1	V control
#2	E/D
#3	GND
#4	OUTPUT
#5	N.C.
#6	V_{DD}

APPLICATION

Phase locked loops, phase shift keying, in telecommunication applications as ADSL, cable modem etc.

ELECTRICAL SPECIFICATIONS

Model		Condition	VXO-S1	VXO-S3
Frequency Range*			1.0 MHz ~50.0 MHz	
Frequency Stability		at +25°C	±15 ppm	
Temperature Stability		over T_{OPR}	±15 ppm / ±25 ppm / ±50 ppm	
Stability vs Power Change		V_{DD} ±5%	±5 ppm	
Stability vs Load Change		15 pF ±10%	±3 ppm	
Pullability		Over Control Voltage Range	±50, ±100, ±200 ppm	±50, ±100, ±150 ppm
Control Voltage Range			0.5 V~ 4.5 V	0.3 V~ 3.0 V
Operating Temp. Range			0°C to +70°C, -40°C to +85°C option	
Storage Temp. Range			-55°C to +125°C	
Power Supply Voltage			5.0 V±5%	3.3 V±5%
Supply Current			30 mA max.	
Output Symmetry		at 1/2 V_{DD}	40% ~ 60%, 45% ~ 55% option	
Rise Time		20% V_{DD} ~ 80% V_{DD}	8 ns max.	10 ns max.
Fall Time		80% V_{DD} ~ 20% V_{DD}	8 ns max.	10 ns max.
Output Voltage	V_{OH} V_{OL}		90% V_{DD} min. 10% V_{DD} max.	
Output Load			15 pF max.	
Start Time			10 ms max.	
Aging first year		at +25°C ±3°C	±5 ppm / year max.	

OPTIONS: A 0.01 uF bypass capacitor should be placed between V_{DD} (pin 6) and GND (pin 3) to minimize power supply line noise. For frequency over 40.0 MHz, please consult us.

All specifications subject to change without notice.

digital electronic gmbh • Tel.: +49 (0) 8221/708-0 • Fax: +49 (0) 8221/708-80

VCXO-705CC

SMD Voltage Controlled Crystal Oscillators

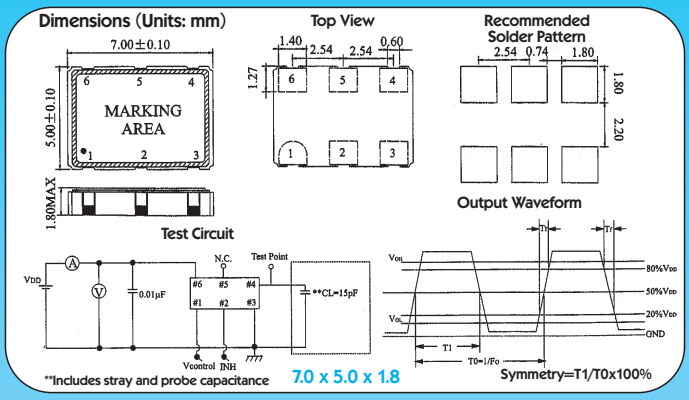

FEATURES

1. Miniature package.
2. CMOS output.
3. Tri-State enable/disable (E/D).
4. Industry standard.
5. 3.3 V operation.

Terminal	Connection
#1	V Control
#2	E/D
#3	GND
#4	OUTPUT
#5	N.C. or E/D
#6	V_{DD}

APPLICATION

For use in phase locked loops, phase shift keying and other telecommunication applications such as ADSL, Cable modem, etc.

ELECTRICAL SPECIFICATIONS

Model		Condition	VCXO-705CC
Frequency Range			50.0 MHz ~200.0 MHz
Frequency Calibration		at +25°C	±15 ppm
Temperature Stability		Over Operating Temperature	±15 ppm / ±25 ppm / ±50 ppm
Stability vs Power Change		V_{DD} ±5%	±5 ppm
Stability vs Load Change		15 pF ±10%	±3 ppm
Pullability		Over Control Voltage Range	±50 ppm / ±100 ppm / ±200 ppm
Control Voltage Range			0 ~ 3.3 V
Operating Temperature Range			0°C to +70°C, -40°C to +85°C option
Storage Temperature Range			-55°C to +125°C
Supply Voltage (V_{DD})			3.3 V ±5%
Supply Current		50.0~95.999 MHz 96.0~200.0 MHz	30 mA max. 40 mA max.
Output Symmetry		at 1/2 V_{DD}	40 ~ 60%, 45 ~ 55% option
Output Voltage	V_{OH} V_{OL}		90% V_{DD} min. 10% V_{DD} max.
Rise Time	20% V_{DD} ~ 80% V_{DD}		1 ns max.
Fall Time	80% V_{DD} ~ 20% V_{DD}		1 ns max.
Output Load			15 pF max.
Start Time			10 ms max.
Pin 2, Tri-State Function			Pin 2= H or open ... output active at pin 4,5 Pin 2= L ...high impendance at pin 4,5
Aging first year		at +25°C ±3°C	±2 ppm / year max.

OPTIONS: A 0.01 uF bypass capacitor should be placed between V_{DD} (pin 6) and GND (pin 3) to minimize power supply line noise.

All specifications subject to change without notice.

digital electronic gmbh • Tel.: +49 (0) 8221/708-0 • Fax: +49 (0) 8221/708-80

VC-SQO-735/LV-PECL • VC-SQO-735/LVDS
VC-SQO-735/HCMOS • SMD OSCILLATOR

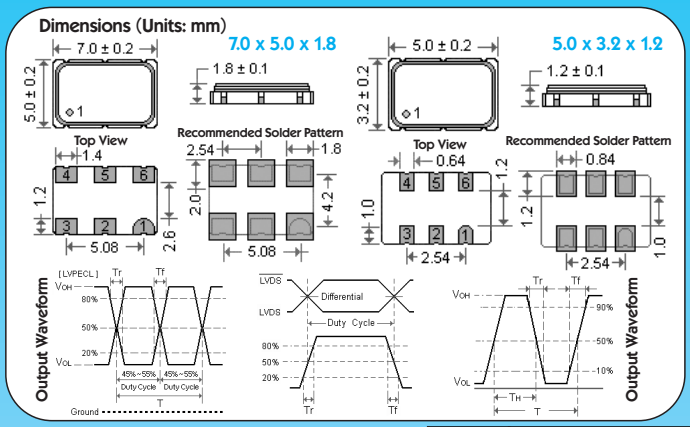

FEATURES

1. Ultra miniature package clock oscillator with size of 5.0 x 3.2 x 1.2 mm and 7.0 x 5.1 x 1.8 mm.
2. Supply Voltge: 3.3 V and 2.5 V.
3. Differential output (LV-PECL, LVDS, HCMOS).

Terminal	LV-PECL / LVDS / HCMOS
#1	Control Voltage
#2	Enable/Disable
#3	GND
#4	HCMOS: OUTPUT LV-PECL/LVDS: Differential
#5	HCMOS: N.C. LV-PECL/LVDS: Complementary
#6	V_{DD}

ELECTRICAL SPECIFICATIONS

Model		VC-SQO-735/LV-PECL	VC-SQO-735/LVDS	VC-SQO-735/HCMOS
Frequency Range		10.0 MHz ~ 1450.0 MHz		10.0 MHz ~ 245.0 MHz
Frequency Stability		±25 ppm / ±50 ppm / ±100 ppm		
Operating Temperature Range		-10°C to +70°C, -40°C to +85°C option		
Storage Temperature Range		-55°C to +150°C		
Supply Voltage		2.5 V ±5% / 3.3 V ±5%		
Current with Output		16 mA typical		
Current Consumption, 2.5 V		100 MHz: 46mA 750 MHz: 56 mA 250 MHz: 48 mA 1 GHz: 60 mA 500 MHz: 53 mA 1.35 GHz: 65 mA	100 MHz: 16mA 750 MHz: 22 mA 250 MHz: 18 mA 1 GHz: 24 mA 500 MHz: 21 mA 1.35 GHz: 26 mA	10 MHz: 15mA 150 MHz: 24 mA 50 MHz: 18 mA 200 MHz: 28 mA 100 MHz: 22 mA 250 MHz: 31 mA
Current Consumption, 3.3 V		100 MHz: 50mA 750 MHz: 64 mA 250 MHz: 55 mA 1 GHz: 68 mA 500 MHz: 60 mA 1.35 GHz: 72 mA	100 MHz: 25mA 750 MHz: 39 mA 250 MHz: 30 mA 1 GHz: 43 mA 500 MHz: 35 mA 1.35 GHz: 47 mA	10 MHz: 17 mA 150 MHz: 28 mA 50 MHz: 20 mA 200 MHz: 33 mA 100 MHz: 24 mA 250 MHz: 37 mA
Output Specification		LV-PECL	LVDS	HCMOS
Output Load		Differential	Differential	15 pF
Output Logic	„0" V_{OL} „1" V_{OH}	V_{DD} -1.85 min., V_{DD} -1.6 max. V_{DD} -1.03 min., V_{DD} -0.6 max.	V_{DD} 1.1 typ., V_{DD} 0.9 max. V_{DD} 1.4 typ., V_{DD} 1.6 max.	10 % V_{DD} 90 % V_{DD}
Rise Time / Fall Time		0.2 ns typical 0.5 ns max.	0.2 ns typical 0.4 ns max.	1.5 ns typical 3.0 ns max.
Output Symmetry		50% ±5%		
Intergrated Phase Jitter (RMS), 12kHz ~ 20MHz		0.6 ps typical		
Start Time		10 ms max.		
Aging (at +25°C) first year		±2 ppm / year max.		

All specifications subject to change without notice.

digital electronic gmbh • Tel.: +49 (0) 8221/708-0 • Fax: +49 (0) 8221/708-80

VCO-705N • VCO-705T

SMD Voltage Controlled Crystal Oscillators

Dimensions (Units: mm)

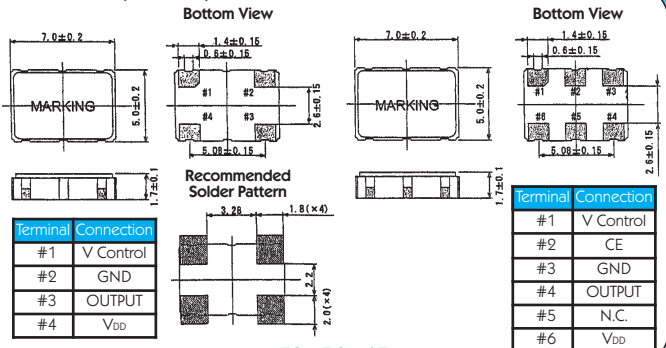

Terminal	Connection
#1	V Control
#2	GND
#3	OUTPUT
#4	V_{DD}

Terminal	Connection
#1	V Control
#2	CE
#3	GND
#4	OUTPUT
#5	N.C.
#6	V_{DD}

7.0 x 5.0 x 1.7

FEATURES

1. Metal cap / ceramic base.
2. Seam welding.

APPLICATION

For ADSL, MPEG, etc.

ELECTRICAL SPECIFICATIONS

Model		VCO-705N	VCO-705T
Frequency Range		1.5 MHz ~54.0 MHz	
Nominal Frequency		27.0 MHz, 35.328 MHz	
Frequency Stability		±30 ppm / ±50 ppm	
Operating Temperature Range		-20°C to +70°C, -40°C to +85°C option	
Storage Temperature Range		-40°C to +85°C	
Supply Voltage (V_{DD})		5.0 V_{DC} ±10%	3.3 V_{DC} ±10%
External Control Fuction / External Control Voltage		±100 ppm min. +2.5 V ±2.0 V DC	±100 ppm min. +1.65 V ±1.35 V DC
Supply Current	F ≤ 20 MHz 20~30 MHz > 30 MHz > 40 MHz	15 mA max. 20 mA max. 25 mA max. 20 mA max.	10 mA max. 15 mA max. 20 mA max. 25 mA max.
Output Load		15 pF, CMOS	
Output Voltage	V_{OH} V_{OL}	90% V_{DD} min. 10% V_{DD} max.	
Rise Time	10% V_{DD} ~ 90% V_{DD}	6 ns max.	
Fall Time	90% V_{DD} ~ 10% V_{DD}	6 ns max.	
Output Symmetry		45 ~ 55% at 1/2 V_{DD}	
Phase Noise		-135dBc/Hz max. at 1 kHz	
Tri-State Function		---	Pin 2: N.C. or H = output enable Pin 2: L = Hi-Z output disable

All specifications subject to change without notice.

digital electronic gmbh • Tel.: +49 (0) 8221/708-0 • Fax: +49 (0) 8221/708-80

VXO-T1 • VXO-T3

SMD Voltage Controlled Crystal Oscillators

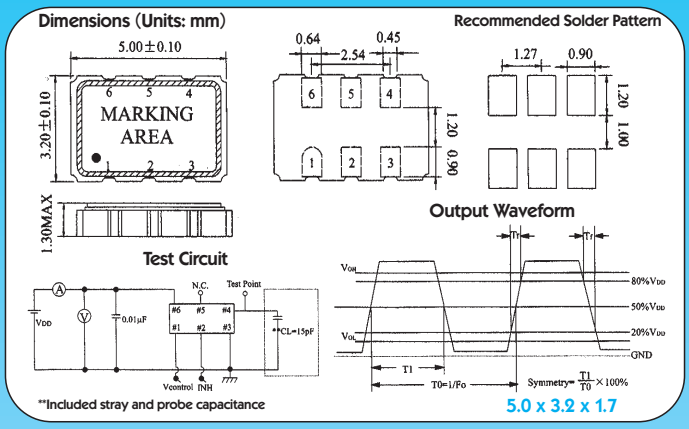

FEATURES

1. Miniature package.
2. Industry standard.
3. TTL / HCMOS output compatible.
4. Tri-State enable/disable (E/D).
5. Tape and Reel.
6. Supply Voltage: 5.0 V and 3.3 V.

Terminal	Connection
#1	V control
#2	E/D
#3	GND
#4	OUTPUT
#5	N.C. or E/D
#6	V_{DD}

APPLICATION

Phase locked loops, phase shift keying, in telecommunication applications as ADSL, cable modem etc.

ELECTRICAL SPECIFICATIONS

Model	Condition	VXO-T1	VXO-T3
Frequency Range*		1.750 MHz ~ 54.0 MHz	
Frequency Stability	at +25°C	±15 ppm	
Temperature Stability	over T_{OPR}	±15 ppm / ±25 ppm / ±50 ppm	
Stability vs Power Change	V_{DD} ±5%	±5 ppm	
Stability vs Load Change	15 pF ±10%	±3 ppm	
Pullability	Over Control Voltage Range	±50, ±100, ±200 ppm	±50, ±100, ±150 ppm
Control Voltage Range		0.5 V~ 4.5 V	0.3 V ~ 3.0 V
Operating Temp. Range		0°C to +70°C, -40°C to +85°C option	
Storage Temp. Range		-55°C to +125°C	
Power Supply Voltage		5.0 V±5%	3.3 V±5%
Supply Current		30 mA max.	
Output Symmetry	at 1/2 V_{DD}	40% ~ 60%; 45% ~ 55% option	
Rise Time	20% V_{DD} ~ 80% V_{DD}	8 ns max.	10 ns max.
Fall Time	80% V_{DD} ~ 20% V_{DD}	8 ns max.	10 ns max.
Output Voltage V_{OH} / V_{OL}		90% V_{DD} min. 10% V_{DD} max.	
Output Load		15 pF max.	
Start Time		10 ms max.	
Aging (at +25°C) first year	+25°C ±3°C	±5 ppm / year max.	

OPTIONS: A 0.01 uF bypass capacitor should be placed between V_{DD} (pin 6) and GND (pin 3) to minimize power supply line noise. For frequency over 40.0 MHz, please consult us.

All specifications subject to change without notice.

digital electronic gmbh • Tel.: +49 (0) 8221/708-0 • Fax: +49 (0) 8221/708-80

VCXO-3225

SMD Voltage Controlled Crystal Oscillators

Dimensions (Units: mm)

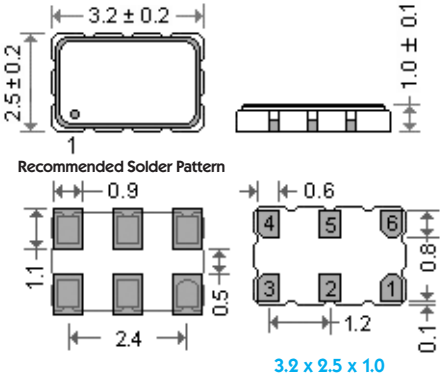

3.2 x 2.5 x 1.0

FEATURES

1. Supply Voltage: 5.0 V, 3.3 V, 2.5 V and 1.8 V.
2. Output: TTL/CMOS.

Terminal	Connection
#1	V Control
#2	Enable/Disable
#3	GND
#4	OUTPUT
#5	N.C.
#6	V_{DD}

ELECTRICAL SPECIFICATIONS

Model	Condition	VCXO-3225			
Frequency Range		1.0 MHz ~50.0 MHz			6.0 MHz ~50.0 MHz
Frequency Stability		±25 ppm / ±50 ppm / ±100 ppm			
Operating Temperature Range		-10°C to +70°C, -40°C to +85°C option			
Input Impedance		1 MΩ typical			
Power Supply Voltage		5.0 V±5%	3.3 V±5%	2.5 V±5%	1.8 V±5%
Current Consumption		10 ~ 45 mA frequency dependent			
Intial Frequnecy Accuracy	at +25°C	to tune to the nominal frequency with			
		V_C=2.5V ±0.2V	V_C=1.65V±0.2V	V_C=1.25V±0.2V	V_C=0.9V±0.2V
Output Logic	Level „1"	4.5 V min.	2.97 V min.	2.25 V min.	1.62 V min.
	Level „0"	0.5 V max.	0.33 V max.	0.25 V max.	0.183 V max.
Frequency Deviation Range	Standard	±80 ppm min.			
Control Voltage Center		2.5 V_{DC}	1.65 V_{DC}	1.25 V_{DC}±1 V	0.9 V_{DC}
Control Voltage Range		0.5 V to 4.5 V	0.3 V to 3.0 V	0.25V to 2.25V	0 V to 1.8 V
Output Load		15 pF max.			
Start Time		5 ms typical, 10 ms max.			
Intergrated Phase Jitter	12 kHz to 20 MHz	200 fsec typical, +3.3 V, 27.0 MHz			
Tri-State Control Characteristics		Tri-State enable high. No connection or V_{DD} -0.5V min. is applied to Tri-State pin to enable output.*			
Aging first year	at +25°C ±3°C	±3 ppm / year max.			

*Ground +0.5 V max. to disable output (high impedance).

digital electronic gmbh • Tel.: +49 (0) 8221/708-0 • Fax: +49 (0) 8221/708-80

TXO-503 • VTXO-503

SMD Temperature Compensated & Voltage Controlled Temperature Compensated Crystal Oscillators

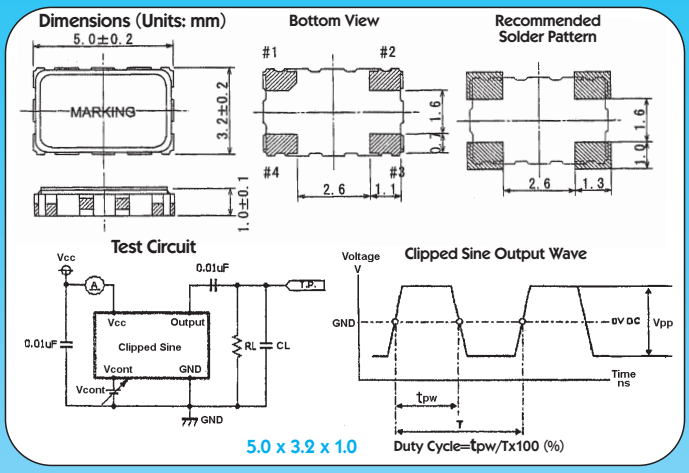

FEATURES

1. High stability.
2. Low supply current.
3. Low phase noise.
4. Clipped sine output.
5. Metal cap / ceramic base.
6. Seam welding.

Terminal	Connection	
	TCXO	VC-TCXO
#1	GND	V Control
#2	N.C.	
#3	GND	
#4	OUTPUT	
#5	N.C.	
#6	Vcc	

APPLICATION

For Mobile GPS, etc.

ELECTRICAL SPECIFICATIONS

Model		TXO-503	VTXO-503
Frequency Range		6.0 MHz ~ 45.0 MHz	
Nominal Frequency		8, 10, 12, 12.8, 13, 14.4, 16.368, 19.2, 19.8, 20, 24.5535, 26, 40 MHz	
Frequency Stability	Tolerance at +25°C Temperature +25°C basis Supply Voltage Stability Load Stability	±0.5 ppm ±2.5 ppm at -30°C to +75°C ±0.2 ppm Vcc ±5% ±0.2 ppm ZL ±10%	
Storage Temperature Range		-40°C to +85°C	
Supply Voltage (V_{DD})		+2.5 V, +2.8 V, +3.0 V, +3.3 V, +5.0 V DC ±5%	
External Control Fuction	Frequency Tuning Range External Control Voltage Input Impedance		±8.0 ppm min. positive +1.5 V ±1.0 V DC 500 kΩ min., 650 kΩ typical
Supply Current	6.0 ~ 20.0 MHz 20.001 ~ 32.0 MHz 32.001 ~ 45.0 MHz	1.5 mA max. 2.0 mA max. 2.5 mA max.	
Output Load		10 kΩ / 10 pF, incl. Probe- and Fixture stray capacitance	
Output Voltage		0.8 V_{P-P} min.	
Output Waveform		Clipped Sine Wave (DC - coupled output)	
Phase Noise		-135dBc typical at 1kHz offset	
Aging (at +25°C) first year		±1.0 ppm / year max.	

OPTIONS: Pin 1 TCXO: V Control: 0.0 V (GND)
Pin 1 VC-TCXO: +1.5 V ±1.0 V

All specifications subject to change without notice.

digital electronic gmbh • Tel.: +49 (0) 8221/708-0 • Fax: +49 (0) 8221/708-80

TXO-320 • VTXO-320

SMD Temperature Compensated &
Voltage Controlled Temperature Compensated Crystal Oscillators

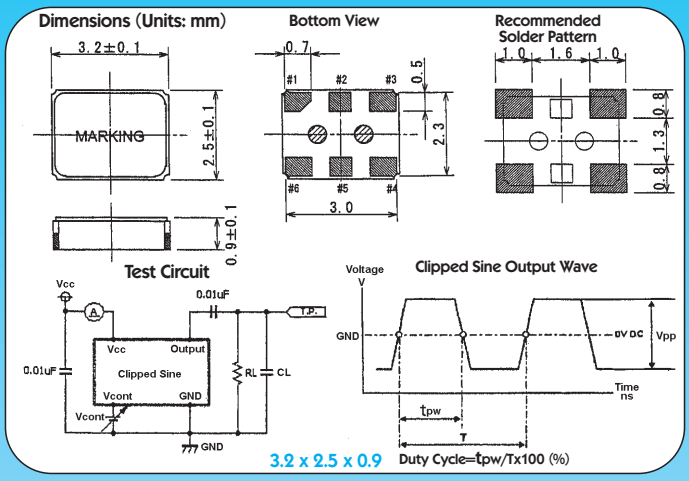

FEATURES

1. High stability.
2. Low supply current.
3. Low phase noise.
4. Clipped sine output.
5. Metal cap / ceramic base.
6. Seam welding.

Terminal	Connection	
	TCXO	VC-TCXO
#1	GND	V Control
#2	N.C.	
#3	GND	
#4	OUTPUT	
#5	N.C.	
#6	Vcc	

APPLICATION

For Mobile GPS, etc.

ELECTRICAL SPECIFICATIONS

Model		TXO-320	VTXO-320
Frequency Range		8.0 MHz ~ 45.0 MHz	
Nominal Frequency		8, 10, 13, 14.4, 16.3676, 19.2, 19.8, 20, 24.5535, 26, 39, 40, 44 MHz	
Frequency Stability	Tolerance at +25°C Temperature +25°C basis Supply Voltage Stability Load Stability	±0.5 ppm ±2.5 ppm at -30°C to +75°C ±0.2 ppm Vcc ±5% ±0.2 ppm ZL ±10%	
Storage Temperature Range		-40°C to +85°C	
Supply Voltage (V_{DD})		+2.5 V, +2.8 V, +3.0 V, +3.3 V, +5.0 V DC ±5%	
External Control Fuction	Frequency Tuning Range External Control Voltage Input Impedance		±8.0 ppm min. positive +1.5 V ±1.0 V DC 500 kΩ min., 650 kΩ typical
Supply Current	8.0 ~ 20.0 MHz 20.001 ~ 32.0 MHz 32.001 ~ 45.0 MHz	1.5 mA max. 2.0 mA max. 2.5 mA max.	
Output Load		10 kΩ / 10 pF, incl. Probe- & Fixture stray capacitance	
Output Voltage		0.8 V_{P-P} min.	
Output Waveform		Clipped Sine Wave (DC - coupled output)	
Phase Noise		-135dBc typical at 1kHz offset	
Aging (at +25°C) first year		±1.0 ppm / year max.	

OPTIONS: Pin 1 TCXO: V Control: 0.0 V (GND); Pin 1 VC-TCXO: +1.5 V ±1.0 V
* also available in low Phase Jitter (0.8 ps)

All specifications subject to change without notice.

digital electronic gmbh • Tel.: +49 (0) 8221/708-0 • Fax: +49 (0) 8221/708-80

ZTB SERIES RESONATORS

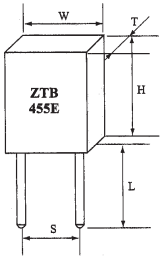

Test Circuit for MOS IC

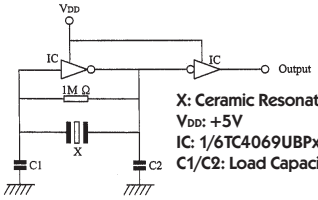

X: Ceramic Resonator
VDD: +5V
IC: 1/6TC4069UBPx2
C1/C2: Load Capacitance

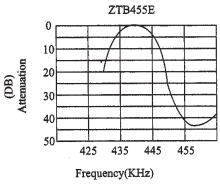

FEATURES

1. Low profile.
2. Low frequency.
3. Low cost.
4. High stability.
5. Small compact size.
6. Plastic package.

ELECTRICAL SPECIFICATIONS

Model	ZTB . . . D		ZTB . . . P	ZTB . . . E	ZTB . . . P	ZTB . . . J	
Frequency Range	190 ~ 249 kHz	250 ~ 374 kHz	375 ~ 400 kHz	401 ~ 509 kHz	510 ~ 699 kHz	700 ~ 999 kHz	1000 ~ 1250kHz
Frequency Accuracy (at +25°C) (kHz / %)	±1.0 kHz	±1.0 kHz	±2.0 kHz	±2.0 kHz	±2.0 kHz	±0.5%	±0.5%
Stability in Temperature -20°C to +80°C (%)	±0.3	±0.3	±0.3	±0.3	±0.3	±0.3	±0.3
Aging for 10 years (%)	±0.3	±0.3	±0.3	±0.3	±0.3	±0.3	±0.3
Resonator Resistance (Ω) max.	20	20	20	20	30	70	100
Load Capacitance C1	330 pF	220 pF	120 pF	100 pF	100 pF	100 pF	100 pF
Load Capacitance C2	470 pF	470 pF	470 pF	100 pF	100 pF	100 pF	100 pF

FREQUENCY RANGE	DIMENSIONS (UNITS: mm)				
	L	W	H	T / Thickness	S / Lead Space
190 ~ 249 kHz	8.0	13.5	14.7	3.8	10.0
250 ~ 374 kHz	7.0	11.0	12.2	3.8	7.7
375 ~ 400 kHz	7.7	7.9	9.3	3.6	5.0
401 ~ 699 kHz	4.0 / 6.0	7.0	9.0	3.5	5.0
699 ~ 1250 kH	3.5 / 5.0	5.2	6.8	2.8	2.5
1000 kHz	4.0	5.1	6.3	2.3	2.5

All specifications subject to change without notice.

digital electronic gmbh • Tel.: +49 (0) 8221/708-0 • Fax: +49 (0) 8221/708-80

ZTBY SERIES
SMD RESONATORS

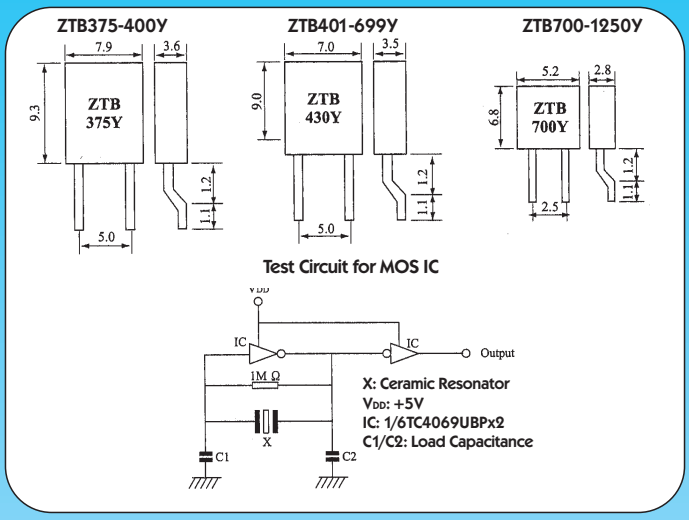

FEATURES

1. Low profile.
2. Low frequency.
3. Low cost.
4. High stability.
5. Surface mount.
6. Plastic package.

ELECTRICAL SPECIFICATIONS

Model	ZTB . . . Y					
Frequency Range	375 ~ 429 kHz	430 ~ 509 kHz	510 ~ 699 kHz	700 ~ 900 kHz	901 ~ 1000 kHz	1001 ~ 1250 kHz
Frequency Accuracy (at +25˚C) (kHz / %)	±1.0 kHz	±1.0 kHz	±2.0 kHz	±2.0 kHz	±2.0 kHz	±0.5%
Stability in Temperature -20˚C to +80˚C (%)	±0.3	±0.3	±0.3	±0.3	±0.3	±0.3
Aging for 10 years (%)	±0.3	±0.3	±0.3	±0.3	±0.3	±0.3
Resonator Resistance (Ω) max.	20	20	30	50	70	100
Load Capacitance C1	330 pF	220 pF	120 pF	100 pF	100 pF	100 pF
Load Capacitance C2	470 pF	470 pF	470 pF	100 pF	100 pF	100 pF

digital electronic gmbh • Tel.: +49 (0) 8221/708-0 • Fax: +49 (0) 8221/708-80

ZTT SERIES RESONATORS

Dimensions (Units: mm)

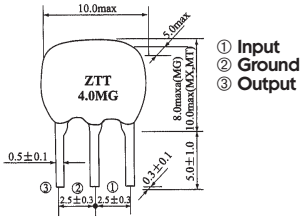

10.0 x 10.0/15.0

Test Circuit for MOS IC

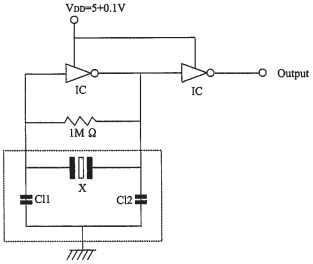

IC: 1/6TC4069UBPX 2 (8.0 to 12.99 MHz)
IC: 1/6TC74HCU04 (13.0 to 50.0 MHz)
X: Ceramic Resonator
CL1=CL2=30 pF ±20%

FEATURES

1. **Built-in capacitor**.
2. Wide frequency range.
3. Low cost.
4. High stability.
5. Small compact size.

ELECTRICAL SPECIFICATIONS					
Model	**ZTT ... MG**			**ZTT ... MT**	**ZTT ... MX**
Frequency Range	1.8 ~ 2.99 MHz	3.0 ~ 3.49 MHz	3.5 ~ 5.99 MHz	6.0 ~ 12.99 MHz	13.0 ~ 50.0 MHz
Frequency Accuracy (at +25°C) (%)	±0.5	±0.5	±0.5	±0.5	±0.5
Stability in Temperature -20°C to +80°C (%)	±0.3	±0.3	±0.3	±0.3	±0.3
Aging for 10 years (%)	±0.3	±0.3	±0.3	±0.3	±0.3
Resonator Resistance (Ω) max.	80	50	30	25	35
Withstanding Voltage (5 sec. max.)	100 V_{DC}	100 V_{DC}	100 V_{DC}	100 V_{DC}	100 V_{DC}
Insulation Resistance min. (at 10V_{DC})	5×10^8 Ω	5×10^8 Ω	5×10^8 Ω	5×10^8 Ω	5×10^8 Ω

ZTA SERIES RESONATORS

Dimensions (Units: mm)

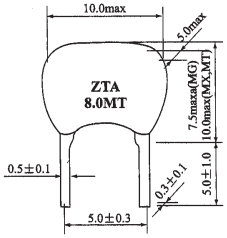

MT: 10 max.
MX: 13.01 to 23.99 MHz, 10 max.
24.00 to 31.99 MHz, 7.5 max.
32.00 to 50.00 MHz, 6.5 max.

10.0 x 10.0/15.0

Test Circuit for MOS IC

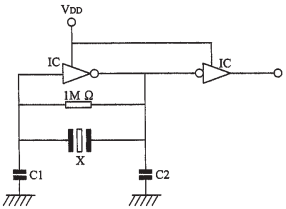

X: Ceramic Resonator
V_{DD} (MG MX): +5V
(MT) : +12V
IC (MG MT): 1/6TC4069UBPx2
(MX): 1/6TC7HCU04x2

FEATURES

1. Wide frequency range.
2. Low cost.
3. High stability.
4. Small compact size.

ELECTRICAL SPECIFICATIONS					
Model	**ZTA . . . MG**			**ZTA . . . MT**	**ZTA . . . MX**
Frequency Range	1.8 ~ 2.99 MHz	3.0 ~ 3.49 MHz	3.5 ~ 5.99 MHz	6.0 ~ 12.99 MHz	13.0 ~ 50.0 MHz
Frequency Accuracy (at +25°C) (%)	±0.5	±0.5	±0.5	±0.5	±0.5
Stability in Temperature -20°C to +80°C (%)	±0.3	±0.3	±0.3	±0.3	±0.3
Aging for 10 years (%)	±0.3	±0.3	±0.3	±0.3	±0.3
Resonator Resistance (Ω) max.	80	50	30	25	35
Withstanding Voltage (5 sec. max.)	100 V_{DC}	100 V_{DC}	100 V_{DC}	100 V_{DC}	100 V_{DC}
Insulation Resistance min. (at 10V_{DC})	$5 \times 10^8\ \Omega$	$5 \times 10^8\ \Omega$	$5 \times 10^8\ \Omega$	$5 \times 10^8\ \Omega$	$5 \times 10^8\ \Omega$

PART NUMBER	FREQUENCY RANGE	CIRCUIT CONSTANTS	
		C1 (PF)	C2 (PF)
ZTA....MG, MT	1.8 ~ 2.99 MHz	30	30
ZTA....MX	13.0 ~ 19.99 MHz	30	30
	20.0 ~ 25.99 MHz	15	15
	26.0 ~ 50.0 MHz	5	5

digital electronic gmbh • Tel.: +49 (0) 8221/708-0 • Fax: +49 (0) 8221/708-80

ZTACC/ZTTCC MG • ZTA&ZTTCS/CV MT
ZTA&ZTTCS/CV/CW MX • RESONATORS

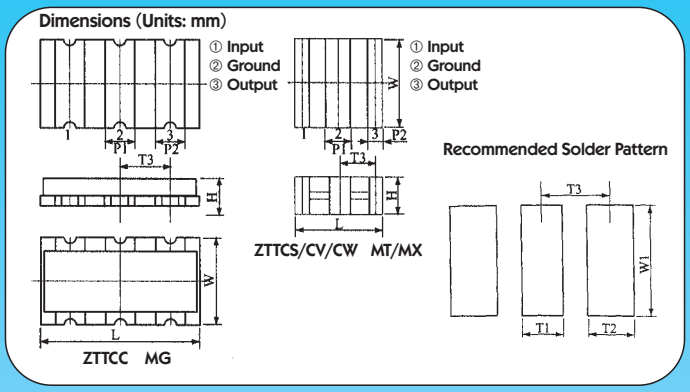

FEATURES

1. The chip ceramic resonator is the miniature high profile frequency control product of surface mount package.
2. Low cost.
3. High stability.
4. Low profile.
5. Surface mount.

ELECTRICAL SPECIFICATIONS

Model	ZTACC / ZTTCC MG	ZTA&ZTTCS/CV MT	ZTA&ZTTCS/CV MX	ZTA&ZTTCS/CW MX
Frequency Range	2.0 ~ 6.99 MHz	7.0 ~ 12.99 MHz	13.0 ~ 50.0 MHz	20.0 ~ 50.0 MHz
Frequency Accuracy (at +25°C) (%)	±0.5	±0.5	±0.5	±0.5
Stability in Temperature -20°C to +80°C (%)	±0.3	±0.4	±0.4	±0.3
Aging for 10 years (%)	±0.3	±0.3	±0.3	±0.3
Resonator Resistance (Ω) max.	80	30	25	35
Withstanding Voltage (5 sec. max.)	100 V_{DC}	100 V_{DC}	100 V_{DC}	100 V_{DC}
Insulation Resistance Minimum (at 10V_{DC})	5 x 10^8 Ω	5 x 10^8 Ω	5 x 10^8 Ω	5 x 10^8 Ω

DIMENSIONS (UNITS: mm)

Part Number	L	W	H	P1	P2	T1	T2	T3	W1
ZTACC, ZTTCC MG	7.4±0.3	3.4±0.3	1.8±0.3	1.2±0.3	1.2±0.3	1.5±0.3	1.7±0.3	2.5±0.3	3.0±0.3
ZTACS, ZTTCS MT/MX	4.7±0.2	4.1±0.2	1.6±0.3	1.0±0.4	0.8±0.4	1.3±0.2	0.8±0.2	1.95±0.2	5.1±0.2
ZTACV, ZTTCV MT/MX	3.7±0.2	3.1±0.2	1.2±0.3	0.9±0.3	0.7±0.3	1.0±0.2	0.7±0.2	1.5±0.2	4.1±0.2
ZTACW, ZTTCW MT/MX	2.5±0.2	2.0±0.2	1.5 max.	0.4±0.2	0.4±0.2	0.5±0.2	0.5±0.2	1.0±0.2	2.6±0.2

digital electronic gmbh • Tel.: +49 (0) 8221/708-0 • Fax: +49 (0) 8221/708-80

LT MB SERIES • LTS MCB/MDB SERIES
LTT MA SERIES • CERAMIC FILTER

FOR TV/VCR USE

Dimensions (Units: mm)

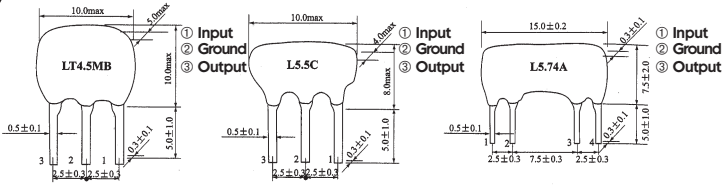

Characteristics

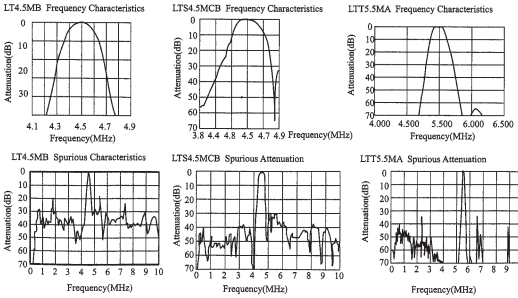

Test Circuit for MOS IC

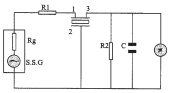

Rg=R1=R2= Input and Output Impedance
C=10pF
Icluding Stray Capacitance and Input Capacitance of RF Voltmeter

ELECTRICAL SPECIFICATIONS

Model	Nominal Center Frequency	3dB Band Width, min. (kHz)	20dB Band Width, max. (kHz)	Insert Loss (dB) max.	Spurious Attenuation, min. (dB)	Input/Output Impedance (Ω)
LT MB Series						
LT4.5MB	4.500	fn±50	530	6.0	20 ($4.5^{+0.8}$ MHz)	1000
LT5.5MB	5.500	fn±75	550	6.0	25 (5.5±1 MHz)	600
LT6.0MB	6.000	fn±80	600	6.0	25 (6.0±1 MHz)	470
LT6.5MB	6.500	fn±80	630	6.0	25 (6.5+1 MHz) 30 (6.5-1 MHz)	470
LTS MCB/MDB Series						
LTS4.5MCB	4.500	fn±60	600	6.0	30 (0~fn)	1000
LTS4.5MDB	4.500	fn±70	750	6.0	30 (0~fn)	1000
LTS5.5MCB	5.500	fn±60	600	6.0	30 (0~fn)	600
LTS5.5MDB	5.500	fn±80	750	6.0	30 (0~fn)	600
LTS6.0MCB	6.000	fn±60	600	6.0	30 (0~fn)	470
LTS6.0MDB	6.000	fn±80	750	6.0	30 (0~fn)	470
LTS6.5MCB	6.500	fn±70	650	6.0	30 (0~fn)	470
LTS6.5MDB	6.500	fn±80	800	6.0	30 (0~fn)	470
LTT MA Series						
LTT4.5MA	4.500	fn±40	370	10.0	40 ($4.5^{+0.8}$ MHz)	1000
LTT4.72MA	4.724	fn±40	370	10.0	40 ($4.5^{+0.8}$ MHz)	1000
LTT5.5MA	5.500	fn±50	350	9.0	50 (5.5±1 MHz)	600
LTT5.74MA	5.742	fn±50	350	9.0	50 (5.74±1 MHz)	600
LTT6.0MA	6.000	fn±50	400	9.0	50 (6.0±1 MHz)	470
LTT6.25MA	6.250	fn±50	400	9.0	50 (6.25±1 MHz)	470
LTT6.5MA	6.500	fn±50	400	9.0	50 (6.5±1 MHz)	470
LTT6.74MA	6.742	fn±50	400	9.0	50 (6.74±1 MHz)	470

All specifications subject to change without notice.

digital electronic gmbh • Tel.: +49 (0) 8221/708-0 • Fax: +49 (0) 8221/708-80

LT10.7 SERIES • CERAMIC FILTER

FOR FM USE

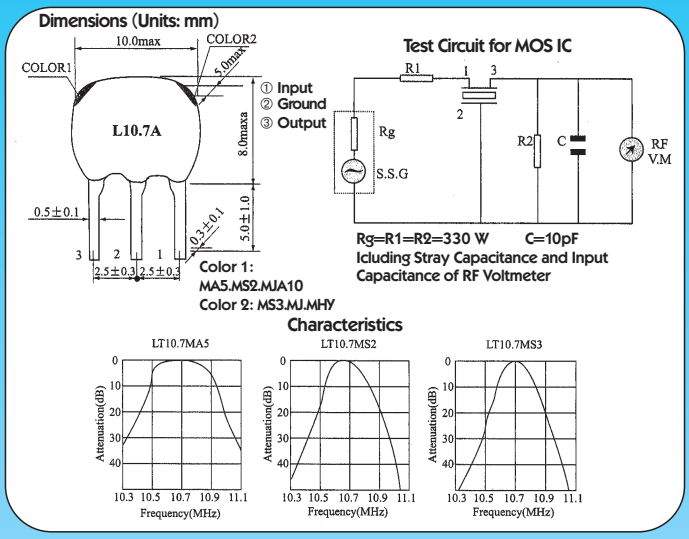

FEATURES

1. Excellent temperature stability.
2. FM use.
3. Low cost.
4. Low profile.
5. High durability.

Center Frequency	Color
D: 10.64 MHz±30 kHz	Black
B: 10.67 MHz±30 kHz	Blue
A: 10.70 MHz±30 kHz	Red
C: 10.73 MHz±30 kHz	Orange
E: 10.76 MHz±30 kHz	White

ELECTRICAL SPECIFICATIONS

Model	3dB Band Width (kHz)	20dB Band Width (kHz)	Insert Loss (dB) max.	Spurious Attenuation 9-12 MHz, min. (dB)
LT10.7M Series of Ceramic Filter for FM Receiver				
LT10.7MA5	280±50	650	6	30
LT10.7MS2	230±50	600	6	40
LT10.7MS2	180±50	520	7	40
LT10.7MJ	150±50	400	10	38
LT10.7M A10 Series of Ceramic Filter (Low - Loss Type)				
LT10.7MA5A10	280±50	590	2.5±2.0	30
LT10.7MS2A10	230±50	520	3.0±2.0	35
LT10.7MS3A10	180±50	470	3.5±1.5	35
LT10.7MJA10	150±50	360	4.5±2.0	35
Wide / Narrow Band-Width Type LT10.7M Series of Ceramic Filter				
LT10.7MA19	350 min.	950	3.0±2.0	20
LT10.7MA20	330±50	680	4.0±2.0	30
LT10.7MHY	110±30	350	7.0±2.0	30
LT10.7MFP	20 min.	95	6.0 max.	24

All specifications subject to change without notice.

digital electronic gmbh • Tel.: +49 (0) 8221/708-0 • Fax: +49 (0) 8221/708-80

LT-455 U/W • LT-450 U/W SERIES
LTM-455 U/W • LTM-450 U/W SERIES
CERAMIC FILTER FOR COMMUNICATION USE

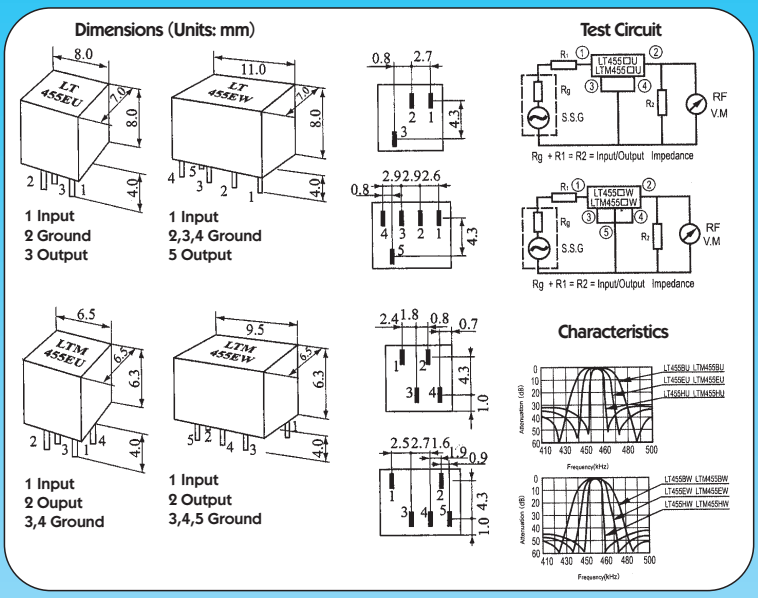

FEATURES

1. Communication use.
2. Low cost.
3. Low profile.
4. Excellent temperature stability.
5. High durability.

ELECTRICAL SPECIFICATIONS

Model		Center Frequency (kHz)	Insertion Loss, max. (dB)	Pass Band Ripple, max. (dB)	6 dB BAnd Width, min. (kHz)	40 dB Band Width, max. (kHz)	50 dB Band Width, max. (kHz)	Stop Band Attenuation f0 ±100 kHz, min. (dB)		Input/ Output Impedance (Ω)
						LT455...U	LT455...W	LT455...U	LT455...W	
LT455B U/W	LTM455B U/W	455±2.0 450±2.0	4	2	±15	±30	±30	28	40	1500
LT455C U/W	LTM455C U/W	455±2.0 450±2.0	4	2	±12.5	±24	±24	28	40	1500
LT455D U/W	LTM455D U/W	455±1.5 450±1.5	4	2	±10	±20	±20	28	40	1500
LT455E U/W	LTM455E U/W	455±1.5 450±1.5	6	2	±7.5	±15	±15	28	40	1500
LT455F U/W	LTM455F U/W	455±1.5 450±1.5	6	2	±6	±12.5	±12.5	28	40	2000
LT455G U/W	LTM455G U/W	455±1.5 450±1.5	6	2	±4.5	±10	±10	28	40	2000
LT455H U/W	LTM455H U/W	455±1.0 450±1.0	6	2	±3	±9	±9	28	40	2000
LT455IU /W	LTM455I U/W	455±1.0 450±1.0	6	2	±2	±7.5	±7.5	28	40	2000
LT455H TU/W	LTM455H TU/W	455±1.0 450±1.0	6	2	±3	±9	±9	35	60	2000

All specifications subject to change without notice.

digital electronic gmbh • Tel.: +49 (0) 8221/708-0 • Fax: +49 (0) 8221/708-80

LTCA10.7 SERIES • LTCV 10.7 SERIES
SMD CERAMIC FILTER

FOR FM USE

Dimensions (Units: mm)

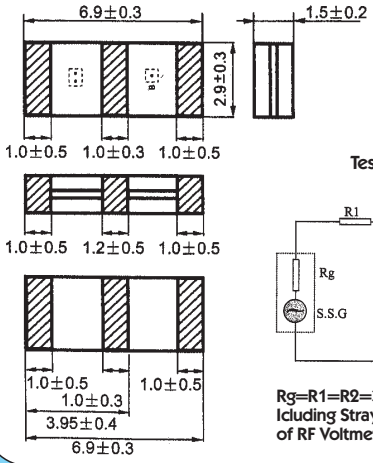

Test Circuit for MOS IC

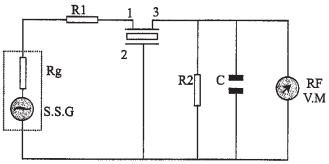

Rg=R1=R2=330 W C=10pF
Icluding Stray Capacitance and Input Capacitance of RF Voltmeter

6.9 x 2.9 x 1.5

FEATURES

1. FM Use.
2. Low cost.
3. Chip type.
4. Excellent temperature stability.
5. High durability.

ELECTRICAL SPECIFICATIONS

Model	3dB Band Width (kHz)	20dB Band Width, max. (kHz)	Insert Loss, max. (dB)	Spurious Attenuation 9~12 MHz, min. (dB)
LTCA10.7MA5	280±50	650	6	30
LTCA10.7MS2	230±50	600	6	40
LTCV10.7MA5	280±50	590	3.0±2.0	40
LTCV10.7MS2	230±50	510	3.5±2.0	38
LTCV10.7MS3	180±40	470	4.0±2.0	20

OPTIONS: Input / Output Impedance: 330 Ω

digital electronic gmbh • Tel.: +49 (0) 8221/708-0 • Fax: +49 (0) 8221/708-80

ISOLATION WAFER
PVC SLEEVE

ISOLIERSCHEIBEN / ISOLATION WAFER

Unsere Isolierscheiben aus Teflon für HC-49/U, HC-49/U-S und HC-49/U-S-K sowie UM-1 und UM-5 Quarze erlauben dem Anwender Leiterbahnen unter den Anschlußdrähten durchzuführen.
Die Isolierscheiben sind lötfest auch für Schwall-Lötungen bis 260°C.

For Isolation between Crystal and Printed Circuit Board (PCB).

PVC SLEEVE

Für Quarze im HC-49/U und HC-49/U-S (Low-Profile-Gehäuse) bieten wir Kunststoffüberzugsisolierungen an. Die Isolierung wird aufge schrumpft, so dass der Quarz flach auf die Leiterplatte gelegt werden kann (z. B. verklebt).

For Heat shrinking over Crystals with Holder HC-49/U.

PICTURE	TYPE	DIMENSIONS (LxWxH) mm
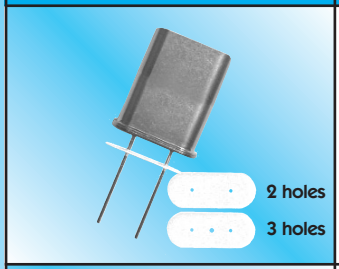	Isolation Wafer 2 holes: HC-49/U HC-49/U-S 3 holes: HC-49/U-S-K	2 holes: 11.2 x 4.65 x 0.188 3 holes: 11.5 x 4.6 x 0.2
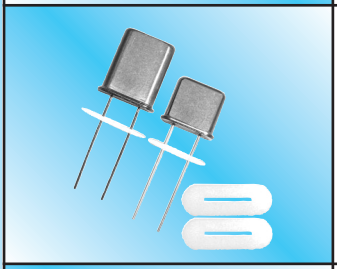	Isolation Wafer UM-1 / UM-5	8.0 x3.0 x 0.3
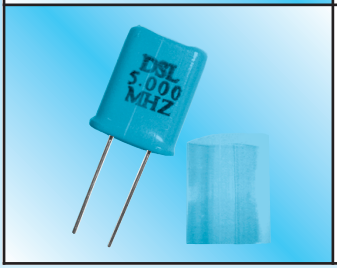	PVC Sleeve HC-49/U	Before heat shrinking approx. 16 x 15 Material-Thickness: 0.2

METAL JACKET

METAL JACKET

Um Quarze im HC-49/U und HC-49/U-S Gehäuse mit einem Masseanschluß (nachträglich) zu versehen, kann unser Metal-Jacket über den Quarzkörper gestülpt werden und quasi als dritten Pin an Ground verdrahtet werden. Dies verbessert die EMV/EMC-Charakteristik der gesamten Schaltung und erhöht außer dem die mechanische Stabilität der Quarzbefestigung, speziell bei den größeren HC-49/U Quarzen.
Es bietet weiterhin die Möglichkeit bedrahtete Quarze kosten günstig Oberflächen zu montieren (SMD).

For easy surface mounting of Lead-bent gullwing type crystals.
For connecting crystal-holder to ground.
To fix Crystal-holders in ruggedized applications.

PICTURE	TYPE	DIMENSIONS (LxWxH) mm
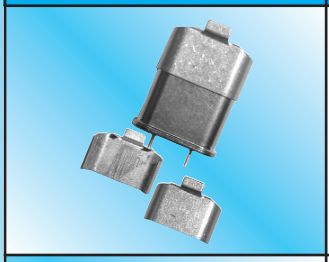	Metal Jacket HC-49/U	10.0 x 7.0 x 2.5/4.0
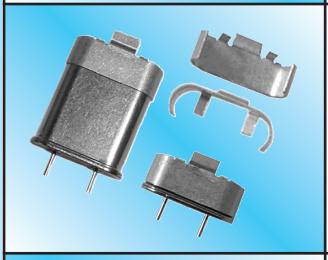	Metal Jacket HC-49/U HC-49/U-S	11.0 x 5.0 x 3.5/4.0
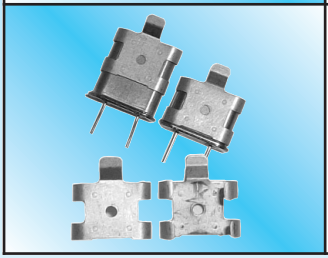	Metal Jacket UM-1 / UM-5	7.0 x 6.9 x 2.0/4.0

FOOT-PRINT-ADAPTER
SOCKEL S2-101P-01

FOOT-PRINT-ADAPTER

Für kurze Entwicklungszeiten oder schnelle Prototypenbestellung bzw. Kleinserien dienen unsere Foot-Print-Adapter. Diese ermöglichen bedrahtete HC-49/U-S Quarze auf „Landing Pattern's" später in Serie geplanter SMD Quarze umzusetzen. Foot-Print-Adapter sind verfügbar u. a. in CPX-25, CPX-49 und MM-39SL Landing Pattern's zur Aufnahme von HC-49/U-S Quarzen. Eine einfache und elegante Designhilfe für Entwicklungsingenieure. Für den Umbau von bedrahteten Quarzen (HC-49/U-S) in SMD-Quarze (oberflächenmontierbar).

For easy surface mounting of through-hole quartz crystals.

SOCKEL S2-101P-01

Für die steckbare / wechselbare Montage von Quarzen in Funkgeräten, Fernsteuerungen, etc.

For pluggable or exchangeable mounting of Quartz Crystals in Radio devices, Remote-controls, etc.

PICTURE	TYPE	DIMENSIONS (LxWxH) mm
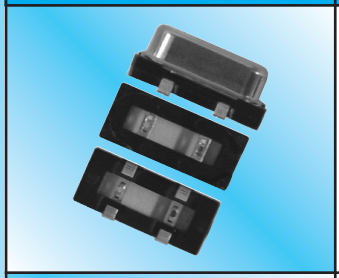	Foot-Print-Adapter HC-49/U-S	11.0 x 4.5 x 1.5/2.0
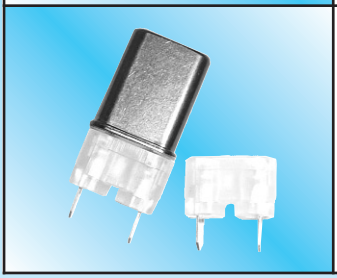	Sockel S2-101P-01	10.5 x 5.0 x 7.0/11.0

LEAD CUT - BENDING - BEADING
SCHNEIDEN - BIEGEN - SICKEN

Ab sofort können wir eine neue Dienstleistung anbieten, und zwar

LOHNVERFORMUNG

d.h. Biegen, Sicken und Lead Cut von radial bedrahteten Bauteilen wie Quarzen, Kondensatoren, Leuchtdioden (LED), Temperatursensoren, radialen Widerständen, etc.

Unsere Bauteilebearbeitungsmaschinen EBSOMAT und BURST & ZICK können mit den unterschiedlichsten Werkzeugeinsätzen bestückt werden und bieten somit ein breitgefächertes Spektrum von Bearbeitungsmöglichkeiten an den radialen Anschlüssen der oben genannten elektronischen Bauteile.

Sie können unser gesamtes Quarz- und LED-Lieferprogramm ab sofort mit bearbeiteten (gebogenen, gesickten, geschnittenen) Anschlüssen von uns beziehen.

Testen Sie uns. Fordern Sie Muster an.

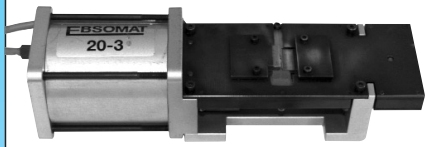

Sicken und Biegen
Beading and Bending

EBSOMAT

BURST & ZICK

Biegen und Schneiden
Bending and Lead cut

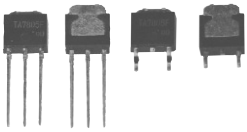

BURST & ZICK

Sicken
Beading

As of now we can offer a new service, namely

LEADCUT - BENDING - BEADING

of radial wire lead components like Quartz Crystals, Capacitors, LEDs, Silicon Sensors, Radial Resistors, and so on.

Our lead-forming-machines EBSOMAT and BURST & ZICK are suitable to have different tools added and offers a variety of leadforming possibilities of said compnents.

We offer our complete range of Crystals and LEDs to be delivered with formed leads to meet your needs.

Ask us for samples!

digital electronic gmbh • Tel.: +49 (0) 8221/708-0 • Fax: +49 (0) 8221/708-80

TAPING BLISTERN

LOHNGURTUNG

Ab sofort können wir eine neue Dienstleistung anbieten und zwar

LOHNGURTUNG

- Tapen von **radialen Bauteilen** wie Quarze, Kondensatoren, Leuchtdioden, radialen Widerständen, etc.
- Tapen von **SMD-Bauteilen** wie Quarze, Oszillatoren, Tact Switches, etc.

Unsere Gurtautomaten können bis zu 800.000 Bauteile pro Monat aufgurten. Für Mustergurte, spezielle Gurtvorschriften, Terminaufträge oder für evt. Kapazitätsengpässe bei Ihren eigenen Gurtvorrichtungen stehen wir gerne zur Verfügung.

Fragen Sie uns, wir gurten alles auf, was Sie automatisch (z. B. auf PANASERT) verarbeiten möchten und verpacken:

- im Ammo Pack
- auf Rolle (Reel)
- Blistergurt
  je nach Anforderung.

Testen Sie uns. Fordern Sie Gurtmuster an!

Sie können unser gesamtes Quarz-Lieferprogramm ab sofort gegurtet von uns beziehen. Wir liefern Quarze und Oszillatoren in allen Industrienormen.

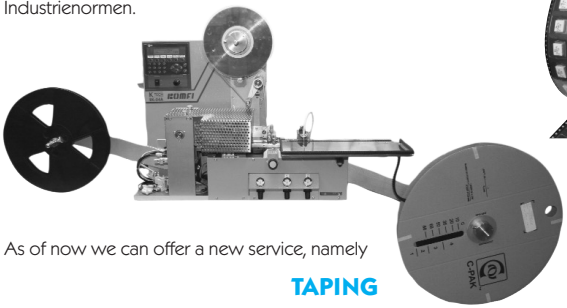

As of now we can offer a new service, namely

TAPING

- Taping suitable for all **radial wire lead components** like Quartz Crystals, Capacitors, LEDs, Diodes , etc.
- Taping suitable for **SMD components** like Quartz Crystals, Oscillators, Tact Switches, etc.

Our taping machines are able to tape up to 800 000 components per month . We are able to tape all of your through hole (THT) and SMD components, which you are using on your automatically insertion machines (e.g. PANASERT, SIPLACE).

We are taping according your specifications and are offering following packaging versions:

- Taped in Ammo Pack
- Taped on Reel
- Blister / Carrier Tape

Test us. Ask for sample tapes!
We offer our whole Quartz Crystals-Program for delivery in a Taped in Ammo Pack or Taped on Reel Version.

digital electronic gmbh • Tel.: +49 (0) 8221/708-0 • Fax: +49 (0) 8221/708-80

GURTUNG - SMD BAUTEILE

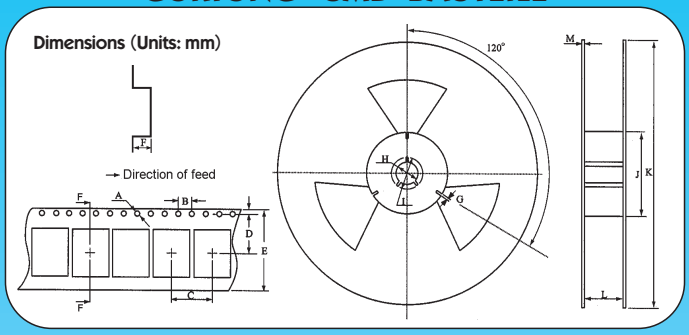

GURT SPEZIFIKATIONEN / TAPE SPECIFICATION

Model	A	B	C	D	E	F	Qty/Reel
Quarze / Quartz Crystals							
SM-49	Ø1.50	4.0	12.0	11.5	24.0	4.35	1000
SM-49-4	Ø1.50	4.0	12.0	11.5	24.0	5.4	1000
MM-39SL	Ø1.50	4.0	12.0	11.5	24.0	3.9	1000
CPX-84	Ø1.50	4.0	8.0	7.5	16.0	2.0	1000
CPX-49S	Ø1.50	4.0	8.0	7.5	16.0	2.0	1000
CPX-49SM	Ø1.50	4.0	8.0	5.5	12.0	1.5	1000
CPX-49SP	Ø1.50	4.0	8.0	5.5	12.0	1.3	1000
CPX-53GA/GD CPX-53GB/GC	Ø1.50	4.0	8.0	5.5	12.0	1.5	1000
CPX-42	Ø1.50	4.0	4.0	3.5	12.0	1.0	3000
CPX-32 CPX-32F	Ø1.50	4.0	4.0	3.5	8.0	1.0	3000
CPX-22	Ø1.50	4.0	4.0	3.5	8.0	1.0	3000
CPX-21	Ø1.50	4.0	4.0	3.5	8.0	0.65	3000
CPX-11	Ø1.50	4.0	4.0	3.5	8.0	0.6	3000
Uhrenquarze / Clock Crystals							
MM-25S	Ø1.50	4.0	8.0	7.5	16.0	2.7	3000
MM-20SS	Ø1.50	4.0	8.0	7.5	16.0	2.7	3000
MM-11B	Ø1.50	4.0	8.0	7.5	36.0	2.7	3000
CMJ-206	Ø1.50	4.0	8.0	9.2	16.0	2.1	3000
CM-519	Ø1.50	4.0	4.0	5.5	12.0	1.1	3000
CM-415	Ø1.50	4.0	4.0	5.5	12.0	1.0	3000
CM-315	Ø1.50	4.0	4.0	5.5	12.0	1.0	3000
CM-212	Ø1.50	4.0	-	3.5	8.0	0.52	3000

GURTUNG - SMD BAUTEILE

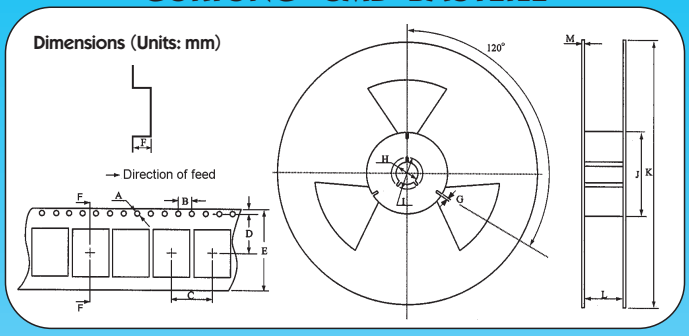

ROLLEN SPEZIFIKATIONEN / REEL SPECIFICATION

Model	G	H	I	J	K	L	M
Quarze / Quartz Crystals							
SM-49	2.5	Ø13.5	Ø21.6	Ø99.5	Ø330	25.5	2.3
SM-49-4	2.5	Ø13.5	Ø21.6	Ø99.5	Ø330	25.5	2.3
MM-39SL	2.0	Ø13.0	Ø21.0	Ø100.0	Ø330	25.5	2.0
CPX-84	2.5	Ø13.5	Ø21.6	Ø60.0	Ø178	17.5	1.6
CPX-49S	2.5	Ø13.5	Ø21.6	Ø60.0	Ø178	17.5	1.6
CPX-49SM	2.5	Ø13.5	Ø21.6	Ø60.0	Ø178	13.5	1.6
CPX-49SP	2.5	Ø13.5	Ø21.6	Ø60.0	Ø178	13.5	1.6
CPX-53GA/GD CPX-53GB/GC	2.5	Ø13.5	Ø21.6	Ø60.0	Ø178	13.5	1.6
CPX-42	2.5	Ø13.5	Ø21.6	Ø60.0	Ø178	9.5	1.6
CPX-32 CPX-32F	2.5	Ø13.5	Ø21.6	Ø60.0	Ø180	9.5	1.6
CPX-22	2.5	Ø13.5	Ø21.6	Ø60.0	Ø180	9.5	1.6
CPX-21	2.5	Ø13.5	Ø21.6	Ø60.0	Ø180	9.5	1.6
CPX-11	2.5	Ø13.5	Ø21.6	Ø60.0	Ø180	9.5	1.6
Uhrenquarze / Clock Crystals							
MM-25S	2.0	Ø13.0	Ø21.0	Ø100.0	Ø330	17.5	2.0
MM-20SS	2.0	Ø13.0	Ø21.0	Ø100.0	Ø330	17.5	2.0
MM-11B	2.0	Ø13.0	Ø21.0	Ø100.0	Ø330	17.5	2.0
CMJ-206	2.0	Ø13.0	Ø21.0	Ø60.0	Ø180	13.0	2.0
CM-519	2.0	Ø13.0	Ø21.0	Ø60.0	Ø180	13.0	2.0
CM-415	2.0	Ø13.0	Ø21.0	Ø100.0	Ø330	17.5	2.0
CM-315	2.0	Ø13.0	Ø21.0	Ø60.0	Ø180	13.0	2.0
CM-212	2.0	Ø13.0	Ø21.0	Ø60.0	Ø180	9.0	1.2

GURTUNG - SMD BAUTEILE

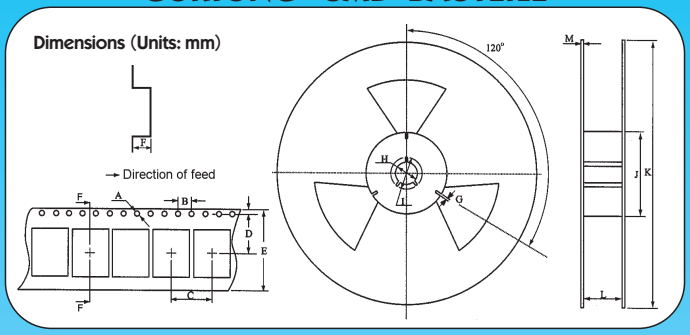

GURT SPEZIFIKATIONEN / TAPE SPECIFICATION

Model	A	B	C	D	E	F	Qty/Reel
Oszillatoren SMD / Oscillators SMD							
SMD-1100S	Ø1.50	4.0	12.0	11.5	24.0	5.4	1000
SCO-735 LV-PECL/LVDS/HCSL	Ø1.55	4.0	8.0	6.25	14.25	1.5	1000
SCO-700/-735SS /-75HF/-75TSW	Ø1.50	4.0	8.0	7.5/-/-/-	16.0	2.0/1.8/1.8 /1.8	1000
SCO-53/-53SS /-53 HF/-53TSW	Ø1.50	4.0	8.0	5.5/-/-/-	12.0	1.5/1.4/1.4/1.4	1000
SCO-53 1.0 V	Ø1.50	4.0	8.0	4.25	10.25	1.1	1000
SCO-32	Ø1.50	4.0	4.0	3.5/-	8.0	1.3/1.4	3000
SCO-22	Ø1.50	4.0	4.0	3.5	8.0	0.9	3000
SCO-20/SCO-16	Ø1.50	4.0	4.0	3.5	8.0	0.65	3000
SCO-75P	Ø1.50	4.0	8.0	7.5	16.0	2.0	1000
SCO-53P	Ø1.50	4.0	8.0	5.5	12.0	1.5	1000
SCO-32P	Ø1.50	4.0	4.0	3.5	8.0	1.3	3000
SCO-22P	Ø1.50	4.0	4.0	3.5	8.0	0.9	3000
VC-TCXO-801	Ø1.55	4.0	12.0	11.5	24.0	2.3	2000
VC-TCXO-802	Ø1.55	4.0	12.0	11.5	24.0	2.3	2000
VXO-S1 VXO-S3	Ø1.50	4.0	8.0	7.5	16.0	2.0	1000
VCXO-705CC	Ø1.50	4.0	8.0	1.75	16.0	1.8	1000
VC-SQO-735 (7.0x5.0) LV-PECL/LVDS/HCMOS	Ø1.50	4.0	8.0	6.25	14.25	1.5	1000
VC-SQO-735 (5.0x3.2) LV-PECL/LVDS/HCMOS	Ø1.50	4.0	8.0	4.25	10.25	1.1	1000
VCO-705N VCO-705T	Ø1.50	4.0	8.0	7.5	16.0	2.4	1000
VXO-T1 VXO-T3	Ø1.50	4.0	8.0	5.5	12.0	1.5	1000
VCXO-3225	Ø1.50	4.0	8.0	2.25	6.25	1.15	3000
TXO-503 VTXO-503	Ø1.55	4.0	8.0	5.5	12.0	1.5	1000
TXO-320 VTXO-320	Ø1.55	4.0	4.0	3.5	8.0	1.4	1000
Resonatoren / Resonators							
ZTACC, ZTTCC	Ø1.50	4.0	8.0	7.5	16.0	2.1	4000
ZTACS, ZTTCS	Ø1.50	4.0	8.0	5.5	12.0	1.8	1000
ZTACV, ZTTCV	Ø1.50	4.0	8.0	5.5	12.0	1.3	1000
ZTACW, ZTTCW	Ø1.50	4.0	4.0	3.5	8.0	1.3	3000
Keramik Filter / Ceramic Filters							
LTCA/CV 10.7 Series	Ø1.50	4.0	8.0	7.5	16.0	2.0	4000

All specifications subject to change without notice.

digital electronic gmbh • Tel.: +49 (0) 8221/708-0 • Fax: +49 (0) 8221/708-80

GURTUNG - SMD BAUTEILE

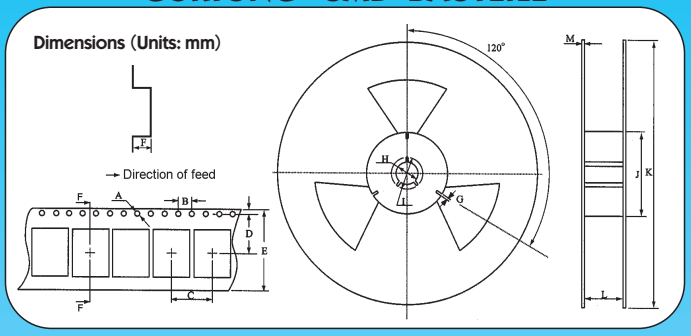

ROLLEN SPEZIFIKATIONEN / REEL SPECIFICATION

Model	G	H	I	J	K	L	M
Oszillatoren SMD / Oscillators SMD							
SMD-1100S	2.5	Ø13.5	Ø21.6	Ø80.0	Ø330	25.5	2.3
SCO-735 LV-PECL/LVDS/HCSL	2.5	Ø13.4	Ø19.5	-	Ø180	16.5	3.1
SCO-700/-735SS /-75HF/-75TSW	2.5	Ø13.5/13.4 /13.4/13.4	Ø21.6/19.5 /19.5/19.5	Ø80.0/-	Ø178/180 /180/180	17.5/16.5 /16.5/16.5	1.6/3.1/3.1 /3.1
SCO-53/-53SS /-53 HF/-53TSW	2.5	Ø13.5/13.4 /13.4/13.4	Ø21.6/19.5 /19.5/19.5	Ø80.0/-	Ø178/180 /180/180	13.5/16.5 /16.5/16.5	1.6/3.1/3.1/ 3.1
SCO-53 1.0 V	2.5	Ø13.4	-	-	Ø180.0	16.5	3.1
SCO-32	2.5/-	Ø13.5/-	Ø21.6/-	Ø60.0/-	Ø178/180	13.5/12.8	1.6/1.9
SCO-22	2.5	Ø13.5	Ø21.6	Ø60.0	Ø178	9.5	1.6
SCO-20/SCO-16	2.0	Ø13.0	Ø21.0	Ø60.0	Ø180.0	9.0	2.0
SCO-75P	2.5	Ø13.5	Ø21.6	Ø80.0	Ø178	17.5	1.6
SCO-53P	2.5	Ø13.5	Ø21.6	Ø80.0	Ø178	13.5	1.6
SCO-32P	2.5	Ø13.5	Ø21.6	Ø60.0	Ø178	13.5	1.6
SCO-22P	2.5	Ø13.5	Ø21.6	Ø60.0	Ø178	9.5	1.6
VC-TCXO-801	2.0	Ø13.0	Ø21.0	Ø80.0	Ø330	24.4	2.0
VC-TCXO-802	2.0	Ø13.0	Ø21.0	Ø80.0	Ø330	24.4	2.0
VXO-S1 VXO-S3	2.5	Ø13.5	Ø21.6	Ø80.0	Ø178	17.5	1.6
VCXO-705CC	2.5	Ø13.5	Ø21.6	Ø60.0	Ø178	17.5	1.6
VC-SQO-735 (7.0x5.0) LV-PECL/LVDS/HCMOS	2.5	Ø13.4	Ø19.5	-	Ø180.0	16.5	3.1
VC-SQO-735 (5.0x3.2) LV-PECL/LVDS/HCMOS	2.5	Ø13.4	Ø19.5	-	Ø180.0	16.5	3.1
VCO-705N VCO-705T	2.5	Ø13.0	Ø21.0	Ø80.0	Ø200	17.5	2.9
VXO-T1 VXO-T3	2.5	Ø13.5	Ø21.6	Ø80.0	Ø178	13.5	1.6
VCXO-3225	2.5	Ø13.4	Ø19.5	-	Ø180	12.8	4.2
TXO-503 VTXO-503	2.0	Ø13.0	Ø20.0	Ø62.0	Ø180	12.4	3.4
TXO-320 VTXO-320	2.5	Ø13.0	Ø22.0	Ø60.2	Ø178	8.0	1.75
Resonatoren / Resonators							
ZTACC, ZTTCC	2.0	Ø13.5	Ø21.6	80.0	Ø330	16.4	3.0
ZTACS, ZTTCS	2.0	Ø13.5	Ø21.6	60.0	Ø180	12.4	3.0
ZTACV, ZTTCV	2.0	Ø13.5	Ø21.6	60.0	Ø180	12.4	3.0
ZTACW, ZTTCW	2.0	Ø13.5	Ø21.6	60.0	Ø180	8.4	3.0
Keramik Filter / Ceramic Filters							
LTCA/CV 10.7 Series	2.0	Ø13.0	Ø21.6	99.5	Ø330	16.4	3.0

All specifications subject to change without notice.

digital electronic gmbh • Tel.: +49 (0) 8221/708-0 • Fax: +49 (0) 8221/708-80

GURTUNG RADIAL BEDRAHTETER BAUTEILE
HC-49/U • HC-49/U-S • HC-49/U-S-K UM-1 • UM-5

GURT SPEZIFIKATIONEN / TAPE SPECIFICATION

Dimensions (Units: mm)

HC-49/U

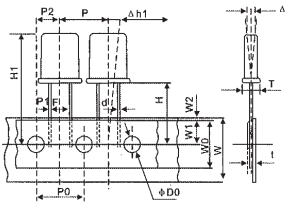

HC-49/U-S, HC-49/U-S-K

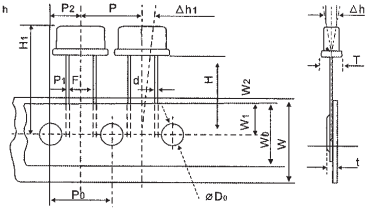

Simbol	Description	HC-49/U	HC-49/U-S	UM-1	UM-5
T	Thickness of Component	5.0 max.			
d	Lead Wire Diameter	Ø0.43 $^{+0.05}_{-0.02}$			
P	Interval Spacing of Component	12.7±1.0			
P0	Pitch of Leading Hole	12.7±1.0			
P1	Tolerance of Leading Hole	3.85±0.7			
P2		6.35±1.0			
F	Lead Pitch	5.0 $^{+0.05}_{-0.02}$			
Δh	Inclination	0±1.0			
W	Tape Width	18.2±0.2			
W0	Adhesive Tape Width	13.0 $^{+0.08}_{-0.02}$			
W1	Tolerance of Leading Hole (Vertical)	8.5±0.3	9.0±0.5	8.5±0.3	8.5±0.3
W2	Tolerance of Cover Tape	2.0 max.			
H	Bottom Surface Position of Component	18.0±2.0	20.5±0.5	18.0±2.0	18.0±2.0
H1	Top Surface Position of Component	33.6 max.	24.5 max.	33.6 max.	33.6 max.
D0	Hole Diameter	Ø4.0±0.2			
t	Tape Thickness	0.7±0.1			
Δh1	Inclination	0±1.0			

ROLLEN SPEZIFIKATIONEN / REEL SPECIFICATION

Dimensions (Units: mm)

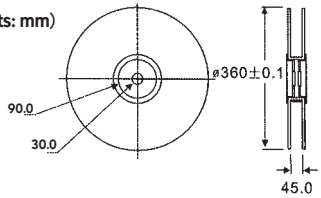

All specifications subject to change without notice.

digital electronic gmbh • Tel.: +49 (0) 8221/708-0 • Fax: +49 (0) 8221/708-80

HC-49/MJ • UM-1/MJ • UM-5/MJ

GURTUNG SMD BAUTEILE

GURT SPEZIFIKATIONEN / TAPE SPECIFICATION

Dimensions (Units: mm)

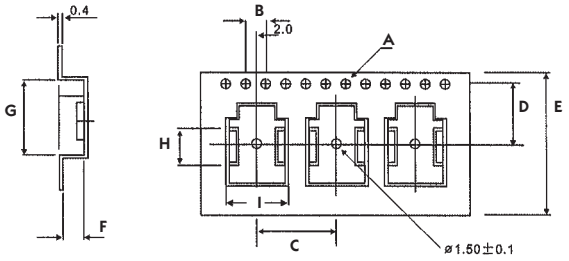

Model	A	B	C	D	E	F	G	H	I	Qty/ Reel
Quarze / Quartz Crystals										
HC-49/MJ	Ø1.50	4.0	16.0	11.5	24.0	6.0	19.0	8.0	7.0	1000
UM-1/MJ			12.0			3.9	14.0	13.0	8.2	1000
UM-5/MJ			12.0			5.5	14.0	10.0	8.5	1000

ROLLEN SPEZIFIKATIONEN / REEL SPECIFICATION

Dimensions (Units: mm)

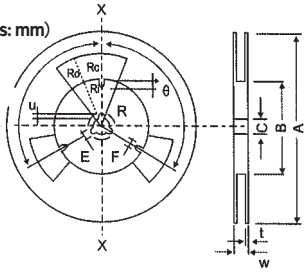

	Description		Code	Dimensions
Flanges	Diameter		A	Ø330±2.0
	Thickness		t	2.4±0.2
	Width between Flanges		W	24.4 $^{+2.0}_{-0.0}$
Center Core	Outline Diameter		B	Ø100±2.0
	Center Core Slit	Width	F	2.3±1.0
		Depth	V	6.0±1.0
		Position	Q	120° ±3°
	Spindle Diameter		C	Ø13.0±0.5
	Key Seats	Width	E	2.5
		Depth	U	5.0±0.5
		Position	Q	120° ±3°
Fenestrate	Outline Radius		R_o	R90 ±1.0
	Inline Radius		Ri	R40 ±1.0
	Rounded		Rc	R5$^{+2.0}_{-0.0}$
	Open Angle		R	40° ±2°

All specifications subject to change without notice.

digital electronic gmbh • Tel.: +49 (0) 8221/708-0 • Fax: +49 (0) 8221/708-80

TSM-26B • TSM-26BJ • TSM-250

UHRENQUARZE / CLOCK CRYSTALS

GURT SPEZIFIKATIONEN / TAPE SPECIFICATION

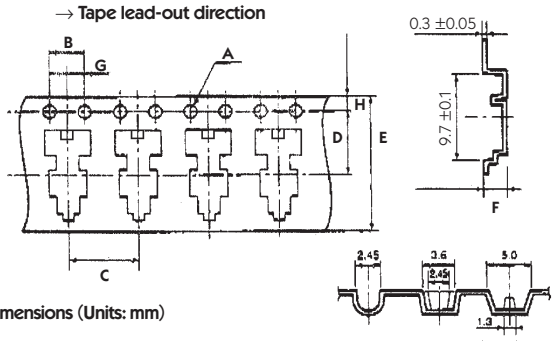

Dimensions (Units: mm)

Model	A	B	C	D	E	F	G	H	Qty/ Reel
Quarze / Quartz Crystals									
TSM-26B TSM-26BJ	Ø1.55	4.0	8.0	7.5	16.0	2.15	2.0	1.75	2000
TSM-250	Ø1.55	4.0	8.0	7.5	16.0	2.15	2.0	1.75	2000

ROLLEN SPEZIFIKATIONEN / REEL SPECIFICATION

Dimensions (Units: mm)

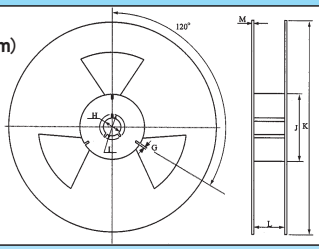

Model	H	I	J	K	L	M
Quarze SMD / Quartz Crystals SMD						
TSM-26B TSM-26BJ	Ø13.0	21.5	110	Ø330	18.0	2.0
TSM-250	Ø13.0	21.5	110	Ø330	18.0	2.0

digital electronic gmbh • Tel.: +49 (0) 8221/708-0 • Fax: +49 (0) 8221/708-80

How to order DSL Quartz Crystals

To order crystals with frequency, tolerances, or configuration not available on the standard list, please furnish the following data:

1. MODEL: _____
2. FREQUENCY: _____ MHz or kHz
3. FREQUENCY TOLERANCE: ± _____ ppm
4. TEMPERATURE STABILITY TOLERANCE:
   ± _____ ppm from _____ °C to _____ °C
5. OPERATING TEMPERATURE RANGE: _____ °C to _____ °C
6. LOAD CAPACITANCE: _____ pF or (SERIES)
7. EFFECTIVE SERIES RESISTANCE: _____ Ω max.
8. DRIVE LEVEL: _____ mW, max. _____ mW, correlation
9. SHUNT CAPACITANCE: _____ pF, max.
10. OSCILLATION MODE: Fundamental or _____ Overtone
11. TEST CIRCUIT (Optional or specified by DSL) _____
12. ADDITIONAL SPECIFICATIONS: _____
13. APPLICATION: _____

Crystals... and more

All specifications subject to change without notice.

digital electronic gmbh • Tel.: +49 (0) 8221/708-0 • Fax: +49 (0) 8221/708-80

How to order DSL Oscillators

To order oscillators with frequency, tolerances, or configuration not available on the standard list, please furnish the following data:

1. MODEL: _____
2. FREQUENCY: _____ MHz or kHz
3. FREQUENCY TOLERANCE: ± _____ ppm
4. OPERATING TEMPERATURE RANGE: _____ °C to _____ °C
5. SUPPLY VOLTAGE: _____ V (±10%)
6. SYMMETRY: _____ % / _____ %
7. OUTPUT: ☐ TTL ☐ CMOS ☐ HCMOS
8. PIN 1-FUNCTION: ☐ N.C. (Not Connected)
   ☐ E/D (Enable/Disable)

9. ADDITIONAL SPECIFICATIONS: _____

10. APPLICATION: _____

Oscillators... and more

digital electronic gmbh • Tel.: +49 (0) 8221/708-0 • Fax: +49 (0) 8221/708-80

How to order DSL Resonators

To order resonators with frequency, tolerances, or configuration not available on the standard list, please furnish the following data:

1. MODEL: _____

2. FREQUENCY: _____ MHz or kHz

3. MAXIMUM EQUIVALENT SERIES RESISTANCE (ESR)

   Standard or _____ Ω max.

4. FREQUENCY TOLERANCE (at +25°C):

   Standard or _____ %

   FREQUENCY STABILITY through Temperature Range:

   Standard or _____ %

   OPERATION TEMPERATURE RANGE:

   Standard or _____ °C to _____ °C

5. LOAD CAPACITANCE:

   Standard or _____ pF

6. OTHER SPECIAL REQUIREMENTS: _____

7. ADDITIONAL SPECIFICATIONS: _____

8. APPLICATION: _____

Resonators... and more

digital electronic gmbh • Tel.: +49 (0) 8221/708-0 • Fax: +49 (0) 8221/708-80

digital electronic
siegfried lehrer gmbh
Rudolf-Wanzl-Str. 3+5
D-89340 Leipheim / Germany
www.digitallehrer.de
digital@digitallehrer.de
Tel. +49 (0) 82 21 / 708-0
Fax +49 (0) 82 21 / 708-80

seit since 1981

Crystals...
Oscillators...
Resonators...
Filters...
and more

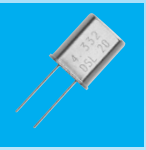

CRYSTALS

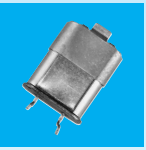

OSCILLATORS

FILTERS

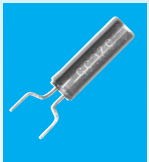

RESONATORS

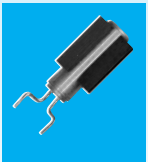

TÜV SÜD ISO 9001
ISO 9001:2008
QUALITÄTS MANAGMENT SERVICE

RoHS compliant
2002/95/EC

2017