VERTICAL SLIDE SWITCH

DSL

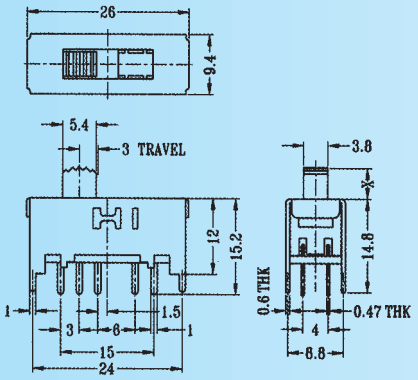

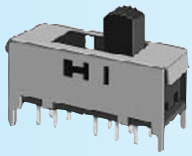

SS-24F01

Rating: 0.3A 50V DC
Function: 2P4T

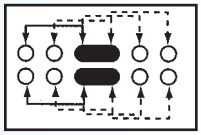

S SHORTING

Optional Knob type

MX	AT	NY	GD		

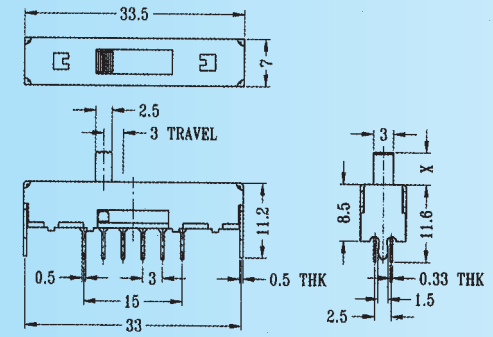

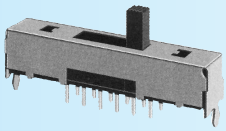

SS-24F02

Rating: 0.3A 50V DC
Function: 2P4T

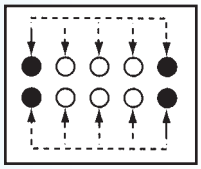

S SHORTING

Optional Knob type

GD					

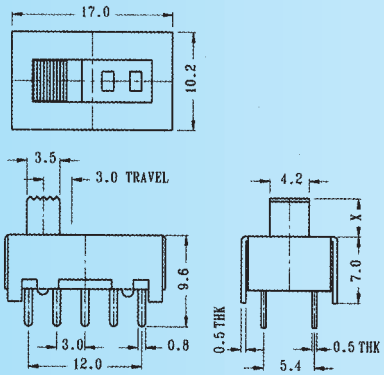

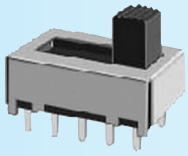

SS-24F03

Rating: 0.3A 50V DC
Function: 2P4T

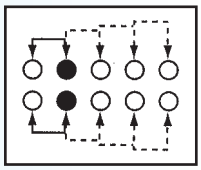

N NON-SHORTING

Optional Knob type

GE	NT				

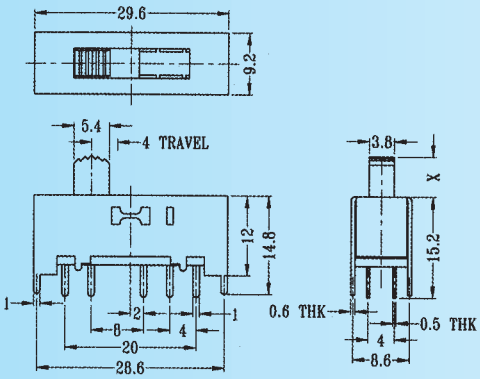

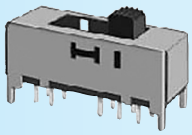

SS-24H01

Rating: 0.3A 50V DC
Function: 2P4T

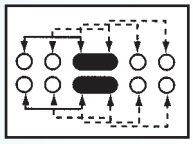

S SHORTING

Optional Knob type

MX	AT	NY	GD		

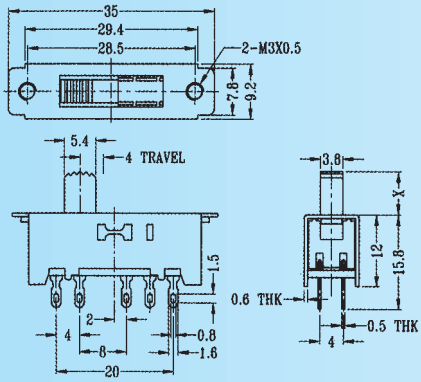

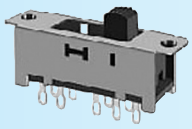

SS-24H02

Rating: 0.3A 50V DC
Function: 2P4T

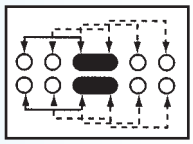

S SHORTING

Optional Knob type

MX	AT	NY	GD		

Digital Electronic Siegfried Lehrer GmbH
Bubesheimer Str. 5 · 89340 Leipheim /Germany · Tel. +49 (0) 8221/708-0 · Fax +49 (0) 8221/708-80