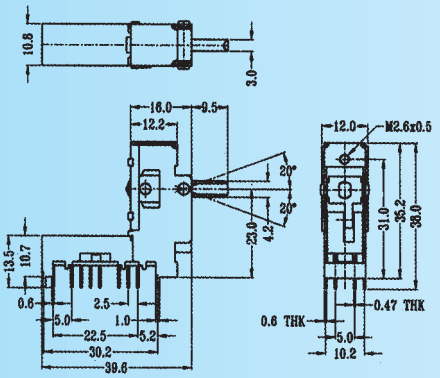

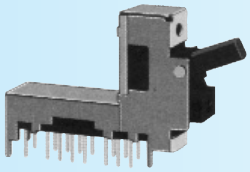

TS-43E03

Rating: 0.3A 50V DC
Function: 4P3T

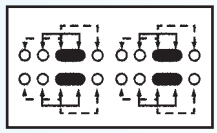

Ⓢ SHORTING

Optional Knob type

TD					

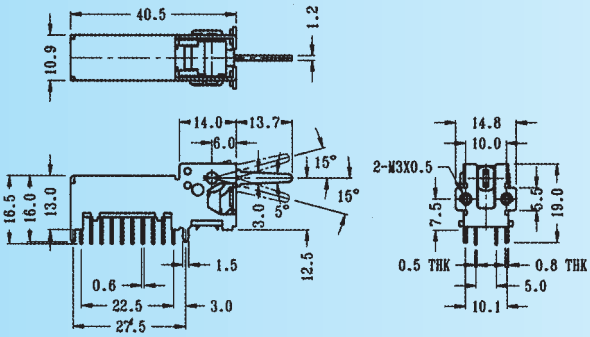

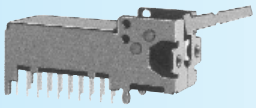

LS-43E11

Rating: 0.3A 50V DC
Function: 4P3T

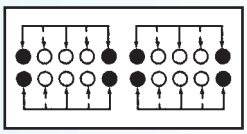

Ⓝ NON-SHORTING

Optional Knob type

TM					

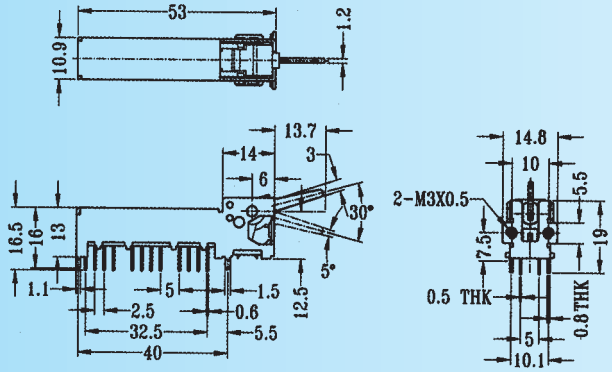

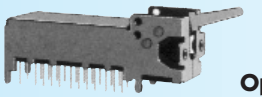

LS-62J01

Rating: 0.3A 50V DC
Function: 6P2T

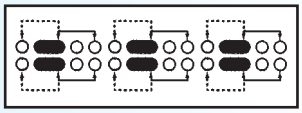

Optional Knob type

TK	TG	TM			

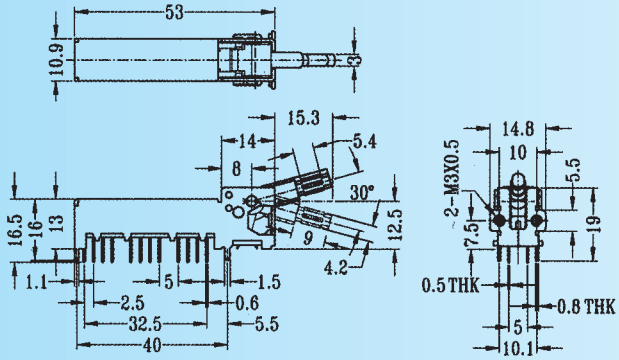

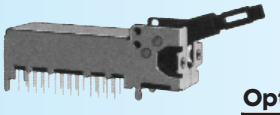

NS-62J01

Rating: 0.3A 50V DC
Function: 6P2T

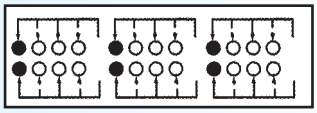

Optional Knob type

TK	TG	TM			

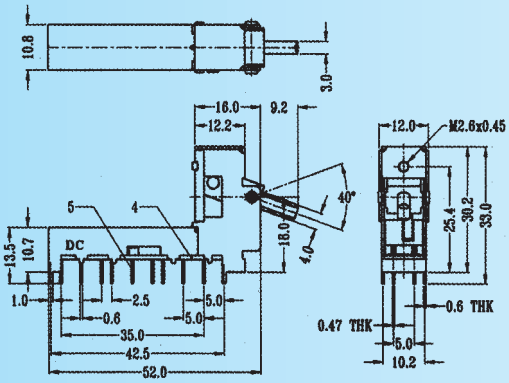

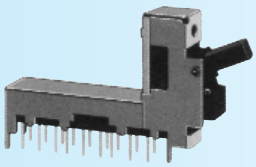

TS-62J01

Rating: 0.3A 50V DC
Function: 6P2T

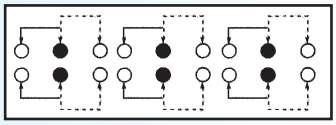

Ⓢ SHORTING

Optional Knob type

TD					

All specifications subject to change without notice.

digital electronic siegfried lehrer gmbh
Bubesheimer Str. 5 · 89340 Leipheim, Germany
Tel. +49 (0) 8221/708-0 · Fax +49 (0) 8221/708-80

www.digitallehrer.de
digital@digitallehrer.de