PRODUKT-INFO

PUSH SWITCH

DSL

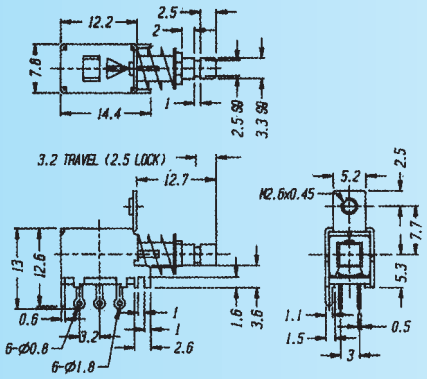

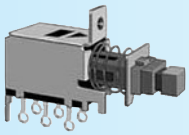

PS-22F09 (LOCKED)
PS-22F10 (NON-LOCKED)

Rating: 0.3A 50V DC
Function: 2P2T

N NON-SHORTING

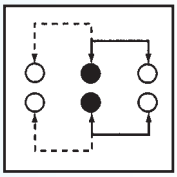

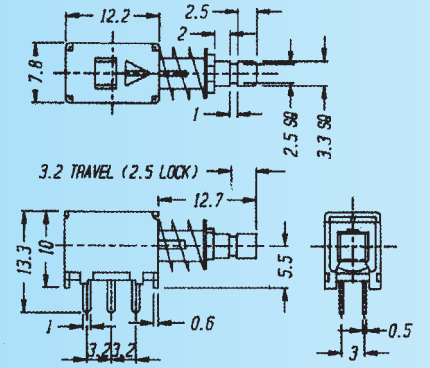

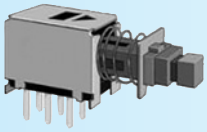

PS-22F11 (LOCKED)
PS-22F13 (NON-LOCKED)

Rating: 0.3A 50V DC
Function: 2P2T

N NON-SHORTING

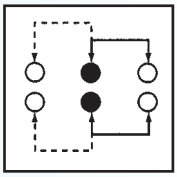

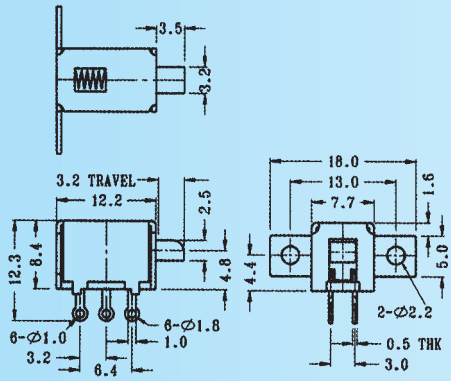

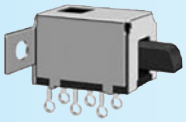

PS-22F14

Rating: 0.3A 50V DC
Function: 2P2T

N NON-SHORTING

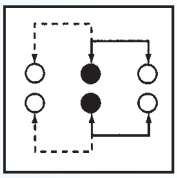

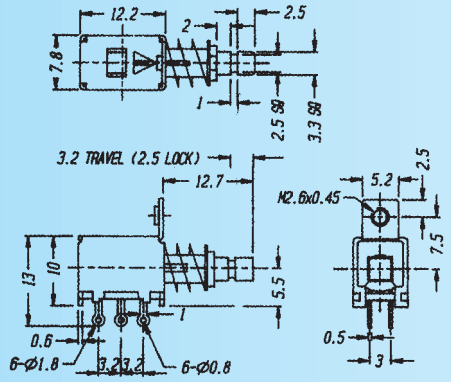

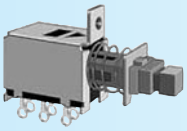

PS-22F15 (LOCKED)

Rating: 0.3A 50V DC
Function: 2P2T

N NON-SHORTING

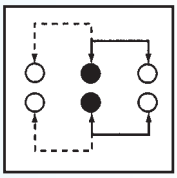

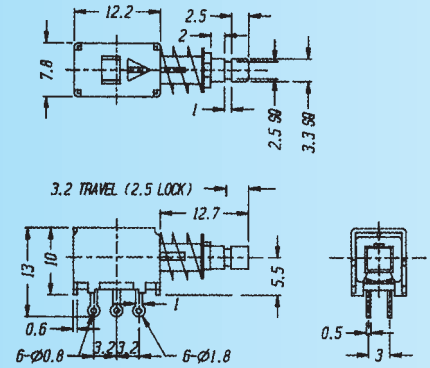

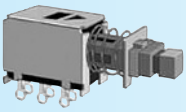

PS-22F16 (LOCKED)
PS-22F19 (NON-LOCKED)

Rating: 0.3A 50V DC
Function: 2P2T

N NON-SHORTING

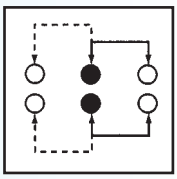

All specifications subject to change without notice.

digital electronic siegfried lehrer gmbh
Bubesheimer Str. 5 · 89340 Leipheim, Germany
Tel. +49 (0) 8221/708-0 · Fax +49 (0) 8221/708-80

www.digitallehrer.de
digital@digitallehrer.de